VC Systems & Controls, Inc.

Installation, Operation, and Maintenance Manual

2017 - ECO SERIES

Domestic Water Booster Systems

VC Systems & Controls
8811 Venture Cove
Tampa, FL 33637
1-800-881-3121
www.vcsystems.net

Index

1.0 Installation

1.1 Receiving

1.1.1 Storage

1.2 Installation

1.2.1 Location

1.2.2 Anchoring

1.2.3 Piping

1.2.4 Electrical

1.2.5 Hydro-pneumatic Tank Installation

2.0 Operation

2.1 General Operation

2.2 ECO Series Controller

2.3

2.4 ABB ACH550 Variable Speed Drive

3.0 Maintenance

3.1 Motors

3.2 Valves

3.2.1 Isolation Valves

3.2.2 Check Valves

3.2.3 Thermal Relief Valve

3.3 Hydro-pneumatic Bladder Tank

3.4 Recommended Maintenance

4.0 Warranty

VC Systems & Controls
8811 Venture Cove
Tampa, FL 33637
1-800-881-3121
www.vcsystems.net

1.0 Installation

1.1 – Receiving

All VC Systems packaged pumping systems are assembled, wired, and tested prior to shipping. VC Systems will package and wrap a protective layer of plastic wrap.

- Verify the booster system delivered is per order.
- Inspect all skids and packaging for damage.
- Verify quantity of skids as there may be additional skids or components that arrive with the booster system and will be noted on the bill of lading.
- After uncrating, verify voltage per order and jobsite requirements against the label on the inside of the control panel door.

If there is an issue with missing items, damage, or anything related to the receiving of a package, contact your VC Systems representative immediately.

NOTE: If the package, crating, or system is damaged, the receiver must note it on the bill of lading that it is damaged or refuse the delivery if damage is severe.

It is **not** VC Systems' responsibility for repairs from damage or missing items if the bill of lading is signed and accepted at delivery. Nor is VC Systems' responsible for damage due to improper storage and handling after receipt of equipment.

1.1.1 – Storage

After receipt of product(s), all materials are required to be stored in a clean, dry, indoor location.

1.2 – Installation

VC Systems' packages are required to be installed by qualified personnel, plumbing and electrical. Standard mechanical and electrical practice shall be adhered to installation. VC Systems is not responsible for damage due to improper installation.

1.2.1 – Location

A. The system shall be installed in a clean, dry, indoor environment with proper ventilation.
B. The system shall be located with sufficient clearance around the package to adequately service all components. Minimum recommended clearance is 18 to 24" on the sides and back of the system. The minimum clearance in front of the control panel and drives shall be per NEC, typically 36" of clearance. Contractor is responsible for verifying requirements per local municipality for local code requirements.
C. VC Systems' packages are not suitable for outdoor installation unless specifically noted.
D. All electrical equipment shall not be installed in direct sunlight.
E. All systems shall be located near a floor drain of sufficient size. Floor drain must remain clean and unblocked. Pumping systems are designed to discharge water, VC Systems is not responsible for any flooding or water damage.

1.2.2 – Anchoring

All units should be leveled and bolted to a firm foundation using the anchoring holes provided in the base or hold down clips.

A. If the unit was supplied with rubber vibration isolators, these are recommended to be installed in the holes in the base and then secured to the firm foundation.
B. If your unit was supplied with rubber vibration padding, these are recommended to place underneath the base and around the structure at each corner and mid-point for equal load bearing. The unit shall still be secured to the firm foundation with the holes provided in the base.

1.2.3 - Piping

A. Pipe connections shall be equal to or greater than the diameter of the header manifold.
B. VC Systems recommends isolation valves to be installed on the suction and discharge of the system, and a bypass line installed around the system for service, maintenance, and removal.
C. When connecting piping of two dissimilar metals, accelerated corrosion can occur. If incompatible metals are to be used, use dielectric isolation devices to prevent galvanic corrosion.
D. Suction and discharge headers should not be used to support field piping. Field piping should be supported adequately and aligned to the system manifolds "naturally" and without strain on the system manifold. Improper alignment can cause pump shaft binding, bearing wear, vibration, and/or damage to impeller and pump casing.
E. Thermal relief valves shall be field piped to drain by contractor.
F. **CAUTION: After installation, it is the responsibility of the installer to tighten all flange bolts prior to pressurizing the system. After pressurizing the system, the installer shall retighten all the flange bolts and inspect for leaks. VC Systems will not assume any liability from leaks or repairs from gasket leaks from loose flange connections.**
G. If rubber flex connectors are supplied - control rods must be installed if max working pressure exceeds 140 PSI. VC Systems is not responsible for any issues or damage caused by flex connector failure.
H. See page 5 for recommended piping schematic.

NOTE: All systems are factory tested and all leaks are eliminated prior to shipping. However, transit via LTL over the highway can cause severe vibration and loosen the flange bolts and connections. As per the IO&M and standard mechanical practice, all bolts shall be tightened at installation.

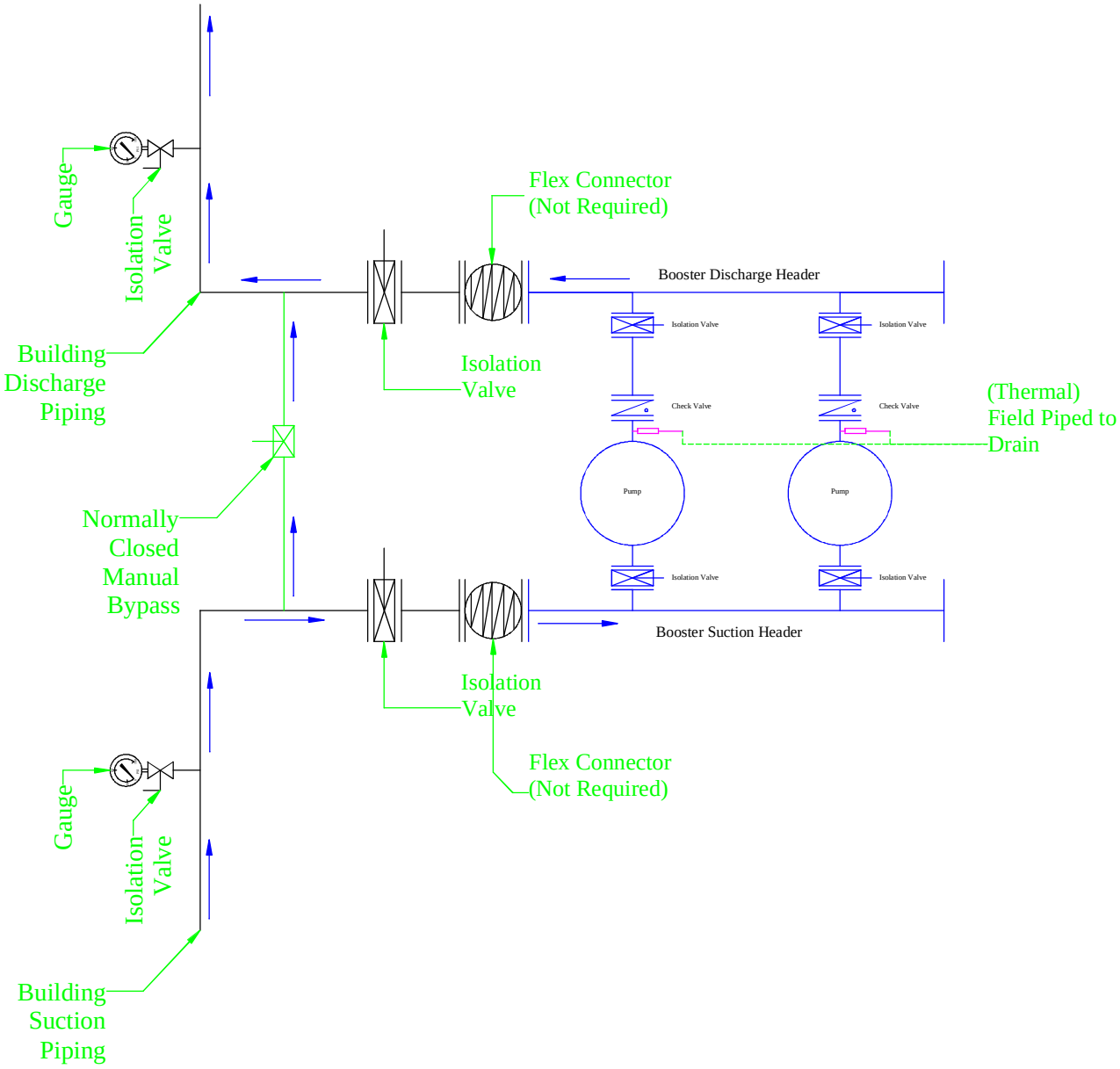

Notes:
1. Schematic is for general layout only. Not to be used for construction.
2. Headers are typically double ended and can be piped from either end.
3. Thermals Relief Valves shall be field piped to drain.
4. Flex connectors are recommended on Class 150 systems under 200 PSI MWP only. VC Systems does not provide or recommend flex connectors on Class 300 systems.

VC SYSTEMS

RECOMMENDED PIPING LAYOUT FOR BOOSTER SYSTEM

3-31-2015 JV | www.vcsystems.net

1.2.4 – Electrical

A. The electrical connection to the control panel should be made by a qualified electrical contractor. Once connected, hazard of electrocution may exist.
B. All connections should comply with NEC and local codes.
C. All systems should be grounded.
D. Prior to installation, open the control panel door and verify the voltage is correctly listed on the wiring diagram located on the inside of the door.
E. Prior to installation, ensure disconnect is in the OFF position.
F. VC Systems recommends the use of copper wire for installation. Refer to NEC and local standards for correct wire connection.
G. After making the connection, check line voltage. System operation requires the voltage variance be no more than +/- 7 percent of that stated on the panel door label.
H. CAUTION: The installer should <u>not</u> power up the system, only authorized personnel at start up shall engage power to the system. VC Systems is not responsible for damage from incorrect installation or incorrect voltage.

1.2.5 – Hydro-pneumatic Tank Installation

A. VC Systems recommends the bladder tank to be remote mounted nearest to the most remote fixture or penthouse mechanical room adjacent to a floor drain.
B. Visually inspect tank for damage which may have occurred during transit.
C. Tanks are pre-charged to 30 PSI per the manufacturer. This may not be correct for the installation.
D. Tank MUST be pre-charged to system design fill pressure before placing into operation. Remove pipe plug covering the valve enclosure, check and adjust the charge by adding or releasing air for each application.
E. If the system has been filled, the tank must be isolated from the system and the tank emptied before charging. This ensures all fluid has exited the bladder and proper charging will occur.
F. If pre-charge adjustment is necessary, oil and water free compressed air or nitrogen gas may be used. Check the pre-charge using an accurate pressure gauge at the charging valve and adjust as required. Check air valve for leakage. If evident, replace the schrader type tire valve core. After making sure the air charge is correct, replace pipe plug over the charging valve for protection.
G. Set tank in place and pipe system connection to plumbing system. Be sure to include isolation valves and drain. Do not loosen nuts on cover plate. This will result in a loss of pre-charge. Cover plate nuts should only be removed when replacing the bladder, and then only after the air pressure in the tank has been bled off to zero gauge pressure.
H. Purge air from system BEFORE placing tank into operation.
I. When filling the system with water open valve to tank to ensure any residual air in the tank is displaced by water.
J. Recommended pre-charge is 10 PSI below set point but not to exceed 100 PSI.
K. Installer is responsible for ensuring tank pressure rating is suitable for the installation location.
L. See page 7 for recommended piping diagram.

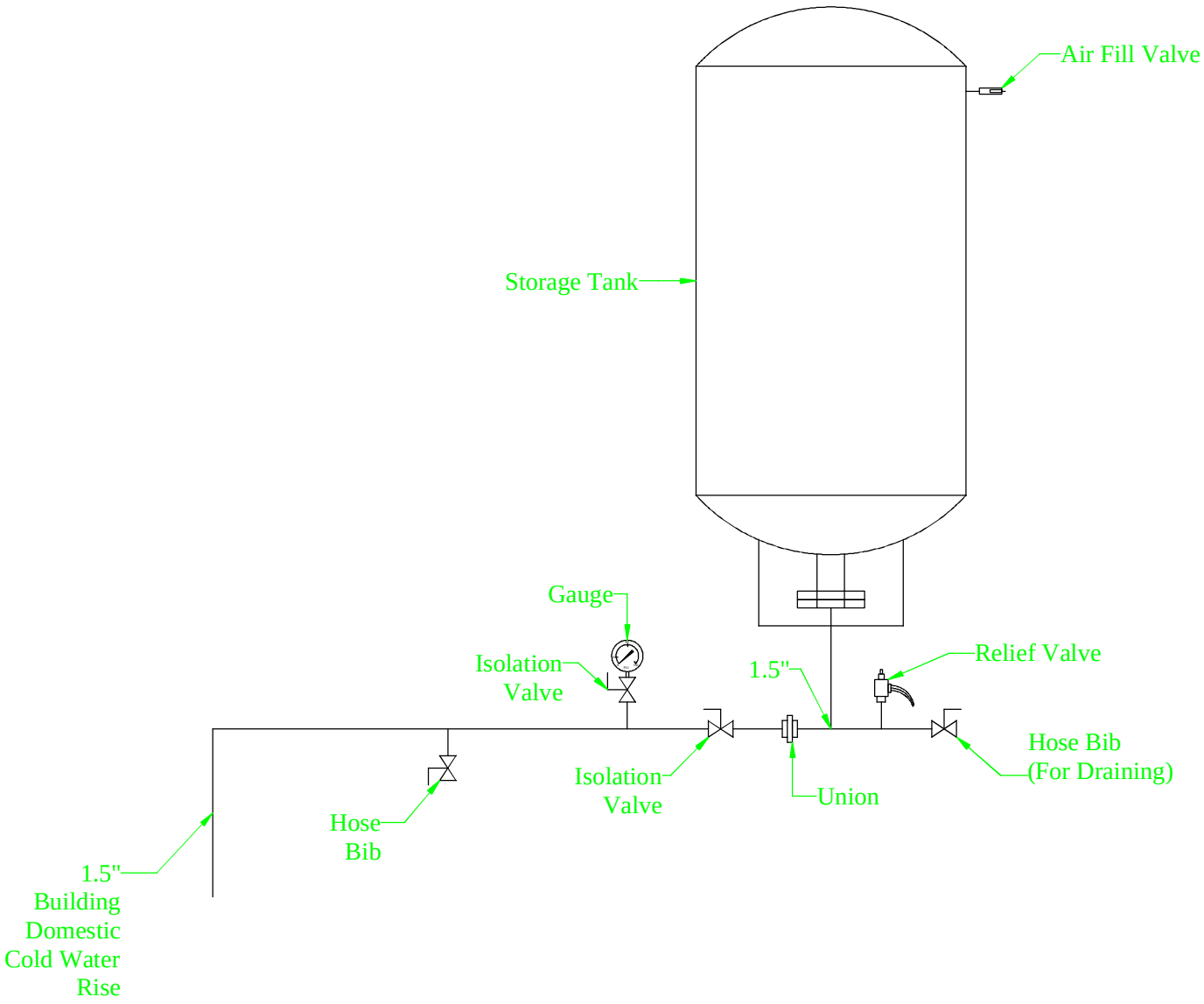

Notes:
1. Tank location suitable for moving the tank into the horizontal position for service.
2. Tank must be secured to the floor.
3. Tank must be installed near a floor drain.
4. Tank must be installed where pressure rating will not be exceeded.
5. All materials for installation by others. VC Systems solely supplies the storage tank and air fill valve.

VC SYSTEMS

REMOTE TANK MOUNTING PIPING SCHEMATIC

11-21-2014 - JV

www.vcsystems.net

2.0 - Operation

2.1 – General Operation

Domestic water booster systems are designed to maintain constant pressure at variable flow. Pressure is maintained by variable speed drives that receive a signal from a pressure transducer located on the discharge header.

A. **Startup shall be performed by an authorized representative. Unauthorized startup will void the warranty.**
B. Every system is tested to the design conditions ordered and warranted to be free from manufacturing defects. See warranty for details.
C. See page 9 for the ECO Series sequence of operation and controller information and safeties.
D. See page 16 for the PMV Series sequence of operation and controller information and safeties.
E. Always refer to the label on the inside of the door label for all connections and variable speed drive settings.

VC Basic Control System Features

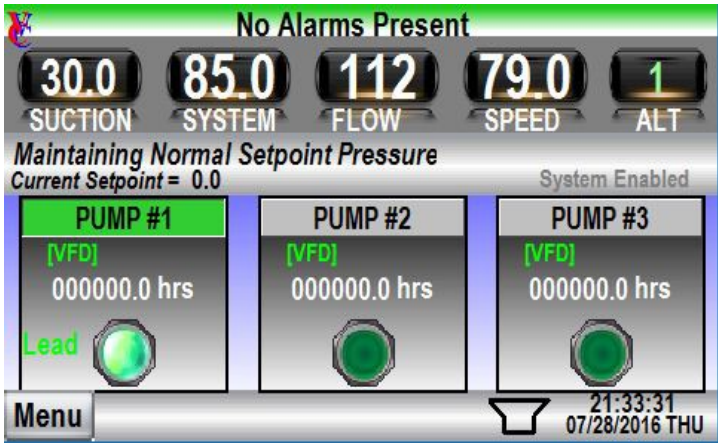

- 1-3 Pumps of any mix, Configurable as Jockey, Variable Speed or Constant Speed.
- Possible to add pumps in the future without reprogramming.
- Time of Day, Run Time, 1st On 1st Off Duty Cycle Alternation.
- Dynamic Speed Controls provide automatic adaptation to changing supply pressures.
- Configurable for Suction pressure sensor or level switch.
- ASHRAE 90.1 Compliant for system friction loss compensation
- Remote disable Input
- Generator lockout to limit number of pumps running under emergency power.
- Sensorless Flow Estimation
- Each alarm can be independently configured for behavior of pump shutdown, and reset modes.
- Advanced PID controls with "Kickstart" and "Stabilization" controls provide fast recovery upon starting the first pump.
- Power up restart delay and pressure recovery mode upon severe pressure loss. Safely and automatically refill empty pipes without water hammer.
- Interstage sequence timer provides better performance and fewer false starts and stops.
- Native MODBUS TCP/IP standard or BACNET MS/TP or IP via optional Gateway.
- 4.3" Color Touch Screen.
- Wide Screen Format provides with full interactive and animated graphics for a clear picture of the system operation.
- X-Y Plot of system operation. 1 plot sample per minute for up to 90 days.
- Event and History log with time date stamps and filter controls. Up to 1000 events.
- Parameter backup and restore utility. Quickly restore all settings to the last known working values at the touch of a button.
- Maintenance reminder message.

Basic Sequence

Controller can be configured for 1 to 3 pumps. Pumps can be one of three types, Small "Jockey" (variable speed), or Variable Speed or Constant Speed. The controller can use any mix of pump types and any type can be installed in any position. It is even possible to change a pump type in the field, for example, if the owner decides they want to convert an older constant speed pump to variable speed, this is now possible with just parameter changes. This guide is universal for any number and type of pumps installed. All pressure and timer settings are user adjustable. Pressure is monitored and processed using an enhanced PID algorithm. The result of this calculation generates a speed signal that will modulate the pump speed to maintain a constant system pressure. Pumps are added and rejected based on the speed. The pump speed has a direct relationship to the flow capacity of the pump. This ultimately stages pumps on and off at the most effective points with minimal disturbance to the system pressure. It will inherently adapt as the pump impeller wears or clogs.

To prevent false starting and premature stopping of the pumps all timed sequences are interlocked. This means that a lag pump will not begin any start delay timers if the lead pump is not running. Similarly the lead pump stop delay timer will not begin timing out until the lag pump has stopped. By interlocking the pumps in this manner it is impossible for any pump to start or stop simultaneously under normal operating conditions. This also provides an orderly staging sequence upon power up or when returning to operation from a shutdown such as low suction. An interstage timer is also provided that allows the user to create a short time gap where pumps cannot be added or removed until the timer expires. This allows time for the hydraulics to settle when pumps start and stop. In this way the start delay for successive pumps can be set shorter if needed. The interstage timer is activated once with each pump start or stop event.

Typical operation example:

As the flow demand on the system increases the PID will speed the pump up to compensate. When the PID output reaches 100% (adjustable) the pump has achieved maximum capacity. Because we know that the pump is at full capacity we do not need to continue flowing beyond this point to induce a pump start via a pressure drop. Instead we begin the time delay (triggered by the PID output) for starting the next pump in line. When the next pump starts the PID will begin slowing as the next pump ramps up to speed and absorbs a portion of the system flow.

As the system flow demand decreases, the PID will begin reducing the pump speed to accommodate the reduction in system flow. When the speed drops below the minimum speed we know that the pump can no longer make enough pressure to open the check valve. At this point it is running at or near dead head. If we set the "PUMP REJECT SETPOINT" at this point then we can reject a pump and let the other pump(s) speed up to compensate for the change in the flow division. Obviously, speeding the pumps up again would cause the "PUMP REJECT SETPOINT" to be exceeded and therefore no additional pumps would be stopped.

Because the drives ramp the speed up and down slowly the PID will have time to adjust the speed of the drives as pumps are added or rejected from operation. For this reason there is little or no change in system pressure when pumps are added or removed.

Dynamic Speed Control System

Configuring the system reject speed can be done manually if desired, but in many cases, the supply pressure to the system varies throughout the day making the the speed based setting difficult to set properly. Thanks to the improved processing power available today, it is now possible to let the controller dynamically calculate the best values in real time so the system will always operate at the optimal points. Unless there is a very specific need for manual controls it is suggested that dynamic speed controls be enabled. However, if manual control is desired, the controllers built in startup wizard can assist in calculating the best values for your application.

Secondary control method

In the event a sudden pressure drop is detected and the pump has not already started from the primary sequence, the pressure drop would stage pumps on using traditional pressure based sequencing. These settings will be based on building minimums to allow more adjustable range on the primary system.

Lead pump Sleep Mode - Maximizing energy savings
A special sleep mode feature is provided that will constantly test for a zero flow condition. When no flow is detected, the lead pump will enter sleep mode, reducing the speed to 0% and effectively stopping the pump. Once the sleep mode has been entered, the pump will remain at 0 speed until a pressure drop is detected. In this way, the building static pressure can sustain small demands similar to the way hydro-pneumatic storage tanks work in many constant speed systems. If a pressure drop is detected, generally set several pounds below the normal operating pressure, the lead pump will ramp up and restore the system pressure. If the building demand is still low enough, the lead pump will return to sleep mode to conserve energy. Sleep mode is compatible on systems with or without hydro-pneumatic storage tanks. In some cases, a hydro-pneumatic storage tanks can be added to increase the amount of time the lead pump can remain in sleep mode.

One common problem with variable speed system is that they are very sluggish upon "waking" from a sleep state and that results in undesirable pressure fluctuations, often for 30 seconds or more. This is because in most cases, the first 50-70% of the pump speed has no impact on the system pressure. It simply requires that much speed to open the check valve and begin flowing water. While a PID is an excellent choice for speed control when everything is up and running, it is blinded during the initial start of the lead pump. The PID will see no change as it speeds up the pump and react more aggressively to compensate. Then suddenly the pressure will spike as the pump crosses the threshold at which the check valve opens and begins flowing water. It's too late to do much at this point because the PID has ramped way beyond the speed required to make the minimum pressure and now has to reduce the speed to correct the huge error. If the water demand is very low, the excess pressure is often trapped and can even cause a high system pressure shutdown in severe cases. This problem requires a very careful and complex mathematical approach to resolve. VC Controls has developed a solution to this age old problem by creating a modified PID algorithm that transparently eliminates this overshoot. The software handles all the complex issues of getting the pump speed up to the threshold as quickly as mechanically possible, then seamlessly transitions into a full PID control scheme once the initial threshold has been overcome. In this way, the system response time is fast, accurate and produces no overshoot, even when starting into a closed valve (no flow) situation.

Pressure Recovery mode
When the pumps are offline for an extended period of time such as after a power outage or a system shutdown, the pressure can drop significantly and potentially create a dangerous hydraulic situation. If the pipes have drained and air has entered the system, simply restarting the system would cause the water to rush in at high velocities to refill the pipe. The very nature of the controller is to restore the pressure as quickly as possible. If the pipes are full, this is desirable, but if the pipes are empty, this can be disastrous. High velocities will eventually slam into the end of the pipe. Water does not compress like air and when it hits the end of the pipe, severe water hammer will occur. If the pipes are new and strong, everything may be fine, but over time as the pipes and fixtures weaken, this water hammer could cause serious damage and pipe breaks. This system has a pressure recovery mode feature that can be enabled to monitor the pressure and determine when the building has begun to drain and draw air into the pipes. In the event the pressure drops to unsafe levels, the recovery mode automatically engage and refill the system slowly by adjusting the pressure setpoint down to the current pressure, then gradually increasing it over time as the pressure is resorted. The recovery mode is fully adjustable so even the weakest pipes can be protected from water hammer resulting from empty pipes.

Alternation of pumps

The controller will change the order in which pumps start depending on programmed settings. This controller employs 3 different types of alternation than can be used independent or together as desired. Failed pumps are automatically removed from the sequence and a new alternation sequence is generated using the remaining pumps. Because the system may have a mixture of different pump types, the alternator will group pumps that are of the same type and alternate each group independently.

Duty Cycle (1st on 1st Off)
When pumps are added or removed from operation, this alternation mode will always attempt to remove the pump that has been operating the longest. In other words, the first pump started will be the first pump stopped. This alternation will generally keep a steady rotation through the pumps under normal circumstances. Actual run time is not controlled or balanced in this mode, but rather the objective of this alternator is to ensure a fresh pump is always used when adding and the pump that has been running longest is stopped first.

Time of Day Alternation
This alternation will automatically alternate the pumps at the preset time of day on selected days of the week. This alternation causes a forced alternation regardless of any run time or stop/start cycles of the pumps. In the scenario where one pump runs continuously, a simple duty cycle alternation may never be induced. The Time of Day alternation will guarantee alternation will occur on specific days at a specific hour.

Excessive Run Time Alternation
Duty Cycle and Time of Day alternation cycle do little to balance the run time of the pumps but do a good job of making sure no pump gets all of the run time. In some cases it is desirable to limit the run time of a pump by switching to a new pump after the current pump has run for a preset time. This is very useful for system that have continuous and relatively stable demands that might cause a single pump to operate alone most of the time. Using the Run Time alternation would cause a new pump to be used every so often. The user may choose to set the run time so a new pump starts every 8 hours of actual continuous running time. This method of alternation can equalize the run time across the pumps if that is the desired goal.

Display Screens

The controller is provided with a 4.3" Wide Screen Format touch sensitive operator interface screen. Actual screens may vary slightly based on number of pumps or special features ordered, however this overview covers typical concepts and features provided with every system. The back light is automatically turned on when any part of the screen is pressed and will remain on for approximately 30 minutes if no buttons are pressed. This timer can be adjusted if desired.

Under normal operation the display will show system operational data such as system and suction pressures or levels, PID output speed, flow rates, pumps running, elapsed run time etc. Many screens will have buttons that allow access to more help or information windows. Some icons such as the speaker in the bottom right hand corner are also buttons. Touching the speaker will mute the beeping sounds heard when pressing buttons. When muted, this icon changes to show if the sound is on or off. Screens that contain sensitive information such as configuration and parameter settings are protected by a password. Take some time to familiarize yourself with the screens available. The Menu button provides access to all major screens such as the main screen, the trending screen, the event log and parameters.

Refer to "Controller Setup" for details on changing system settings.

Trending and Event Logs

This controller is provided with special data logging capabilities. The event log can be accessed by touching MENU then selecting ALARM & EVENT LOG. These logs can be very useful when troubleshooting system operation. All events such as pump alarms and actual pump run status are logged as they occur. The time that they occurred and the time that they ended are also recorded. Many events will also include values related to the event in the message. For example, if the supply pressure to the system dropped and caused the system to alarm, the message would show a Low Supply Alarm followed by the pressure that the was being supplied at the moment the alarm engaged. Normal system events appear in a bold print as they occur and fade to a lighter color as they end. Active events can be double clicked to change the color so it is easy to identify new alarms that occur after current alarms are acknowledged. Alarm events will appear in the scrolling banner at the top of the screen that turns red when alarms exist, otherwise it will be green. A special log filtered to display just the alarms can be accessed by touching the Alarm banner. This can be very helpful for viewing all alarms present at once when many alarms exist. All alarms will appear in the normal event log as well. The first screen shows current alarms and events. A button on this screen opens a window that allows viewing of older events and alarms. To simplify viewing, alarms are indented and preceded with [!]. All events and alarms are backed up in EEPROM memory so they are retained even after a power loss. In addition to the event log, a real time chart recorder is provided that will show the trend history of the system and suction pressures as well as the pump speed over the past 90 days or more. Each screen displays about 60 minutes of data and samples are approximately 1 minute apart.

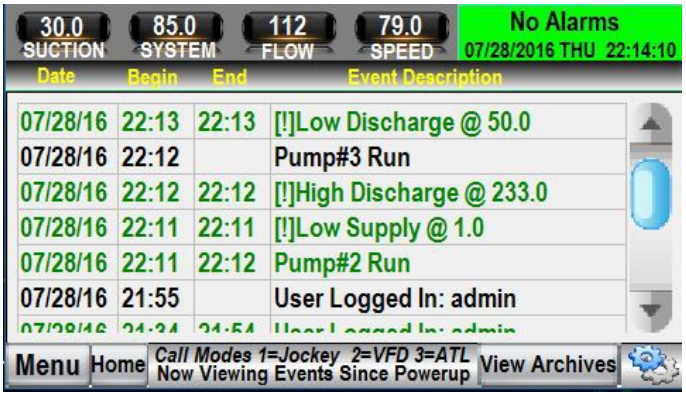

Data from the current day can be accessed by simply using the arrow keys at the bottom of the chart recorder to scroll back and forth through time. You can skip from day to day using the DATE arrow buttons located near the right edge of the chart. Touching the chart will cause the date in the upper left corner of the chart to change to the date and time of the point you touched.

Event history logs and x-y data plots share EEPROM memory so both are retained through a loss of power. When the memory is full, the oldest data is deleted as new data comes in. The ample storage should be enough to track down issues even if they have spanned over long periods of time.

Alarms and Indicators and other controls

The system will monitor the supply and discharge pressures as well as drives for proper operation. In the event of abnormal operation the controller will illuminate a common alarm lamp and display a message indicating the source of the problem. All systems are provided with a form C common alarm "dry" contact for remote monitoring. This contact will change state in the event of any alarm including loss of power. The "Silence" button may be pressed to quiet the audible alarm while problems are resolved. The local and remote alarms will remain active until the condition ceases.

Note: Each alarm can be configured as needed to cause a pump shutdown, manual or automatic restart of pumps as well as manual or automatic reset of the alarm. The configuration is limited to factory authorized personnel due to the possible dangers involved in some scenarios and to ensure warranties are not void.

All systems are provided with the following alarms and messages. Additional alarms and messages are provided in addition to those listed here. Related information to each alarm is provided at the touchscreen for all alarms.

LOW SYSTEM ALARM

If the pressure (level) fails to rise above the low pressure (level) alarm setting within the alarm delay timer setting, this alarm will be engaged to notify an operator of the condition. This alarm will automatically reset when the condition ceases to exist. Possible causes include pumps left in the off position, motor overloads or drives tripped or clogged pump impellers.

HIGH SYSTEM ALARM

If the discharge pressure (level) rises above the alarm pressure (level) setting for the duration of the alarm delay timer, all pumps in "AUTO" will be stopped to prevent damage to system piping. Some possible causes include a failure of a pressure sensor or excessively high supply pressure to the system, improper PID tuning or manual operation of the pump above the high pressure alarm setting. A pressure display that is higher than the range printed on the sensor can indicate a sensor failure or wiring problem. Note that it is more common for a sensor to fail to negative pressure than a high pressure.

LOW SUCTION ALARM

The water source to the system should have some positive pressure (level). If this pressure (level) is lost there is danger of damage to the pump caused by a lack of water to properly lubricate the pump bearings. If the pressure (level) drops below the alarm pressure (level) setting for the duration of the time delay then the pumps in "AUTO" will be stopped. The pumps will automatically return to operation when the water supply pressure returns. The alarm must be manually reset.

Note: The suction alarm can be configured for a variety of sensors. Systems that pump from a pressurized city water main will generally have a pressure sensor, where as a system that is fed from a reservoir tank might use a level sensor or possibly a level switch. This controller can be configured for each of these possibilities.

PUMP#[x] FAIL TO START (Where [x] = the pump number that has failed)
If any motor starter fails to engage when the controller calls it, this alarm is engaged to alert the operator that the system capacity is now reduced. System will continue to operate with the remaining pumps. This alarm can occur under drive failure, Drive Keypad switch in "Off" or if the drive has failed to start when called. On constant speed pumps or drive bypasses, this can also occur when an overload trips. The fail to start alarm must be manually reset.

Starting the system up for the first time

Each pump is provided with "HAND-OFF-AUTO" selector switches (on the drive keypad) and run indication lamps (on color touch screen). The "HAND" position is intended for attended use only. This mode will over-ride all alarms except the motor overload or drive trip. This can be useful for operating a system manually with failed components or for testing pump operation during startup. The "OFF" position will prevent a pump from being started in any mode. This is not a service lockout position. Always disable the power source to a pump before performing service. Failure to do so may result in personal injury or death. When preparing to start a system for the first time there are many things to be aware of. You need to familiarize your self with the controller, the required connections and the piping that the system is connected to. Never just walk up to a panel and throw the switch on and expect it to work. Doing so can cause serious damage to the system piping as well as the people around. Always assume all wires are live and practice safe electrical technique. Startup should only be performed by trained factory authorized personnel.

Controller Setup

All controller settings can be adjusted from the local control panel display only. Remote displays are not permitted to change parameters as this could cause a hazardous situation if a person is not present to monitor the reaction of the system to parameter changes.

To change parameters you will need to log in first to prevent unwanted tampering of the system parameters. Several security login levels are possible. Each parameter is assigned a security level. If your login level is not high enough, you will be prompted to log in at a higher level when a parameter is touched. It is not necessary to be logged in to view parameters, only to make changes
The panel is shipped with the password set as follows

User Levels allow changes to most parameters.
USER: 1111
OWNER Level permits changing parameters that could be critical to building safety such as high pressure shutdown alarm values. It also allows the creation of new users. Users can be created and removed by touching MENU then select MANAGE USERS.

Factory Representative Level can access all parameters except Admin parameters and can view and change all passwords except Admin level. Factory Reps are given their password by the factory.

Admin Level grants access to all parameters and all passwords. Factory level passwords are not published for obvious reasons.

To access the parameters simply touch the menu button and select the desired option you wish to view or change. You will be logged out automatically after 10 minutes, or if you press any of the logout buttons found in many locations. If you attempt to change a parameter that you do not have privileges to change, the login screen will pop up and prompt you to log in at a level that will permit changes. It is suggested that new users and passwords be entered at startup to improve security.

Simple default parameters are shown in the parameter lists below. A factory representative can change any password in the event all passwords are lost. For security reasons, the Factory passwords are not shown in this manual.

Touch the value of any parameter and a keypad will pop up to allow you to change that value.

Parameter Group [Screen ID]	Description *Value shown in brackets are factory default {###}*	Field Setting
GROUP [101.x]	**Low Discharge Alarm** [101.1] Alarm Value – *Alarm engages when pressure drops below this pressure* [101.2] Delay On – *Delay in seconds prior to activating alarm* [101.3] Delay Off – *Delay in seconds before alarm auto resets (if configured for auto reset)* [101.4] Alarm Behavior – *See chart below* [101.5] Reset Hysteresis – *Alarm resettable if pressure is this amount above the Alarm Value* *Alarm Behavior Chart* *0-Pumps Run, Alarm Auto Resets After Delay* *1-Pumps Run, Manual Alarm Reset* *2-Pumps Stop, Manual Restart, Manual Alarm Reset* *3-Pumps Stop, Pumps Auto Restart After Delay, Manual Alarm Reset* *4-Pumps Stop, Pumps Auto Restart After Delay, Alarm Auto Resets After Delay*	

Parameter Group [Screen ID]	Description *Value shown in brackets are factory default {###}*	Field Setting
GROUP [102.x]	**High Discharge Alarm** [102.1] Alarm Value – *Alarm engages when pressure rises above this pressure* [102.2] Delay On – *Delay in seconds prior to activating alarm* [102.3] Delay Off – *Delay in seconds before alarm auto resets (if configured for auto reset)* [102.4] Alarm Behavior – *See chart in group 101.x* [102.5] Reset Hysteresis – *Alarm resettable if pressure is this amount below the Alarm Value*	
GROUP [103.x]	**Low Supply Pressure/Level Alarm** [103.1] Alarm Value – *Alarm engages when pressure drops below this pressure* [103.2] Delay On – *Delay in seconds prior to activating alarm* [103.3] Delay Off – *Delay in seconds before alarm auto resets (if configured for auto reset)* [103.4] Alarm Behavior – *See chart in group 101.x* [103.5] Reset Hysteresis – *Alarm resettable if pressure is this amount above the Alarm Value*	
GROUP [104.x]	**High Supply Pressure/Level Alarm** [104.1] Alarm Value – *Alarm engages when pressure rises above this pressure* [104.2] Delay On – *Delay in seconds prior to activating alarm* [104.3] Delay Off – *Delay in seconds before alarm auto resets (if configured for auto reset)* [104.4] Alarm Behavior – *See chart in group 101.x* [104.5] Reset Hysteresis – *Alarm resettable if pressure is this amount below the Alarm Value*	
GROUP [105.x]	**Supply Tank Makeup Water (Set values to zero to disable)** This is optional equipment, however it can be added in the field. Consult the factory for assistance to add this option. If the controller was provided with this option installed, then set the levels as needed to maintain the supply tank level. [105.1] Full Level – End Fill Cycle [105.2] Low Level – Begin Fill Cycle	
GROUP [106.x]	**Scale Local Supply Sensor** Most sensors are 0-300psi or 0-416" for level. The Span would be 300 or 416 respectively. The offset allows you to correct for level sensors that are not touching the bottom of a tank. For example, if the sensor was 6" from the bottom, you can use the Offset value to correct the displayed level. [106.1] Span {PSI/INCHES button} – *Range of sensor from min to max* [106.2] Offset – *Offset from zero.* [106.3] Error Delay – Delay to prevent false alarms [106.4] Alarm Behavior - *See chart in group 101.x* [106.5] Sensor Type {SENSOR/SWITCH button}– *You can configure the controller to use a pressure or level SENSOR or optionally you can use a SWITCH such as an optical or float switch. When changing between types, no sensor can be connected to the terminal board. The PLC input can be damaged if any sensor is connected while changing this value!*	
GROUP [107.x]	**Scale Local Discharge Sensor** Most sensors are 0-300psi. The Span would be 300. The offset is usually set to zero for pressure sensors. If the sensor does not read exactly zero when no pressure is applied, the offset can be used to correct the pressure display error if desired. [107.1] Span {PSI/INCHES button} – *Range of sensor from min to max* [107.2] Offset – *Offset from zero.* [107.3] Error Delay – Delay to prevent false alarms [107.4] Alarm Behavior - *See chart in group 101.x*	

Parameter Group [Screen ID]	Description *Value shown in brackets are factory default {###}*	Field Setting
GROUP [108.x]	**PID Tuning Parameters** Some basic understanding of PID tuning is assumed. If you need assistance, please contact the factory before changing the values in this group. [108.1] Proportional – *Proportional Gain (Larger Values = More Aggressive)* [108.2] Integral – *Integral Gain (Larger Values = More Aggressive)* [108.3] Derivative – Not suggested for use on pump systems. Leave set to 0. [108.4] Sample Time x100ms – *Controls how often the PID recalculates.*	
GROUP [109.x]	**PID Speed Parameters** It is suggested that these values be set using the Startup Wizard. The wizard provides help based upon jobsite conditions to set all values in this group. [109.1] Mechanical Speed Limits – *Sets upper and lower limits of pump speed* [109.2] Dynamic Speed Controls – *Auto calculates Reject and Wake Speeds When Enabled* [109.3] Reject Speed & Wake Speed – *Manual setting if 109.2 is disabled* [109.4] Default Speed on Sensor Failure	
GROUP [110.x]	**PID Sleep Mode** These value control how the Sleep mode behaves. [110.1] Sleep Test Frequency – *Controls how often the system will test for no flow. Tests only occur when the system is running only one pump and the speed is below the reject speed.* [110.2] Abort Sleep Test Deviation – *Pressure can sag when testing for no flow due to small amounts of back flow through the check valves. This values controls how much sag is allowed during a test cycle. If the pressure drops by this amount, the test will be aborted and the system will return to normal operation.* [110.3] Kickstart Hold Time – *This value controls how long the controller will hold at the wake speed upon waking from sleep mode. This should be set long enough to allow the air in the system to compress and the velocity to stabilize. In most cases, this is 5-10 seconds. In sever cases more time may be required.* [110.4] Boost Before Entering Sleep Mode – *This value will increase the system pressure after no flow is proven and before the system enters sleep mode. This is especially useful on systems that utilize a storage tank as it allows more water to be stored and results in longer sleep time for the system.*	
GROUP [111.x]	**PID Setpoint** These values are set if you run the startup wizard. The setpoint is the only setting that can be changed without logging in. For this reason, the limits are used to prevent unwanted tampering. Limits allow users a small range of adjustment. If no range is desired, simply set the limits and the setpoint all to the same value to prevent any changes without logging in. [111.1] Minimum Setpoint Pressure Limit [111.2] Maximum Setpoint Pressure Limit [111.3] Normal Setpoint / Wake Deviation – *The normal setpoint is what the system will try to maintain. The Wake level is the deviation below the normal setpoint that causes the system to wake up if sleeping.* [111.4] Deadband – *This value creates a zone where the PID will stop calculating. It is not desirable to make pumps vary speed for fractional pressure changes. This value usually does not required adjustment.*	

Parameter Group [Screen ID]	Description *Value shown in brackets are factory default {###}*	Field Setting
GROUP [112.x]	**Pressure Recovery Mode** In most systems the upper floors need 40-60 psi. If the pressure were to drop 40-60psi below the normal setpoint, it is reasonable to assume that air is now entering the pipes at the upper levels. Setting these values near or slightly higher than the normal pressure of the upper floors will cause the system to enter a pressure recovery mode if the pressure ever drops this much. The pressure will be slowly restored without water hammer automatically. [112.1] Recovery Mode Deviation – *Sets the pressure drop that will engage pressure recovery mode.* [112.2] Recovery Mode Step – *Sets the amount the setpoint will step up each time the system reaches the current setpoint. This increment will continue until the pressure returns to a value between the setpoint and (setpoint – parameter 112.1).*	
GROUP [113.x]	**Remote Disable** [113.1] Low Pressure Alarm on Remote Disable – *If a remote disable contact is wired to the terminal board and the contact is closed, the system will stop all pump. In some cases such as irrigation systems, it may be desirable to disable the low system pressure alarm while the system is disabled.*	
GROUP [114.x]	**Configure Pumps** [114.1] Type– *Jockey, VFD, VFD with Bypass or Constant Speed* [114.2] ETM's– *ETM's can be reset here* [114.3] Design Flow– *Flow at design point from pump curve data.* [114.4] Fail to Start Delay [114.5] Jockey Pumps {Run/Stop button} When Lag pumps run	
GROUP [115.x]	**Pump Shutoff Pressure** The shutoff pressure is the pressure the pump makes at 100% speed into a closed valve. This can come from a pump curve or by performing a test with a gauge on the pump discharge vale. [115.1] Max Shutoff Pressure Jockey Pumps [115.2] Max Shutoff Pressure Variable Speed Pumps [115.3] Max Shutoff Pressure Constant Speed Pumps	
GROUP [116.x]	**System Design Flow Data** [116.1] Maximum Design Flow of System– *This is usually, but not always the sum of all of the pumps. In some cases the system may have standby pumps so this value should only reflect the sum of the maximum number of pumps running.* [116.2] Calculated Flow Filter Step Division – *If the calculated flow changed too rapidly, increasing this value will slow it down.* [116.3] Flow Totalizer Set/Reset	
GROUP [117.x]	**System Pump Run Limits** Here you can configure a system with 3 pumps to use one or more as a standby pump. For example, if you have 3 pumps but never want more than 2 to run at a given time, then change 117.1 to 2. All three pumps will be alternated in the sequence but the system will never operate more than two at a time. [117.1] Max Number of Pumps that can Run [117.2] Max Pumps Enabled on Generator Power – *If the backup generator is undersized, this value can be used to limit the number of pumps that can run while under generator power. The feature requires the generator run status be wired to the terminal board of the controller.*	
GROUP [118.x]	**Pump Start/Stop Delays** [118.1] Lead Pump Start Delay [118.2] Lag Pump(s) Start Delay [118.3] Interstage Delay– *Dead zone between pumps starts or stops* [118.4] Min Run Time VFD and ATL – *The ATL time is also used for the pump exercise run time.*	

Parameter Group [Screen ID]	Description *Value shown in brackets are factory default {###}*	Field Setting
GROUP [119.x]	**Pump Exercisers** [119.1] Exercise Pumps After Idle Time *(hrs)*	
GROUP [120.x]	**Automatic Alternation** [120.1] First On First Off {On/Off button} Overlap (secs) [120.2] Run Time Alternation (hrs) – *Set to 0 to disable* [120.3] Time Of Day Alternation– *Set days of week and the time to alternate. Note, you must turn to off before you can change any day or time values.*	
GROUP [121.x]	**System Restart Delay** This provides a delay before restarting any pumps after a power up. [121.1] Delay before restarting pumps on Powerup *(sec)*	
GROUP [122.x]	**ASHRAE 90.1 Configuration** ASHRAE 90.1 allows local mounting of the discharge sensor if the controller can compensate for the system head loss. [122.1] ASHRAE90.1 Maximum Offset Compensation [122.2] ASHRAE 90.1 Compensation Profile {Squared/Linear button)	
GROUP [123.x]	**Hand-Off-Auto Selector Switches** [123.1] Does this control panel have physical selector switches installed? *{Yes/No button}*	
GROUP [124.x]	**MODBUS TCP/IP** Configure IP address for BAS communications. [124.1] MODBUS TCP/IP [4x001 - 4x050] *Modbus IP Address* *Fixed/DHCP Switch* *Subnet* *Gateway IP*	
GROUP [125.x]	**Factory Representative Information** [125.1] Name, City, State, Phone, Zip	
GROUP [126.x]	**Scheduled Service Reminder** [126.1] *Yearly Popup Service Reminder* Month and Day	

Remote Monitoring and interface

MODBUS TCP/IP is available via the Ethernet port located on the bottom of the touchsceen (from inside the panel). The default parameters are shown on the field connection diagram, however these can be changed as needed in parameter group 124.
Note: Login is required to make changes to MODBUS TCP/IP settings. Login as Network Administrator with password 4444.

Refer to the wiring diagram on the enclosure door for connection details.

The following data can be read over the MODBUS connection.

MODBUS ADDRESS	DATA	FORMAT	NOTES
4x001	System (Discharge) Pressure	16 bit signed integer	
4x002	Active Setpoint Pressure	16 bit signed integer	
4x003	Suction (Supply) Pressure(psi) or Level(inches)	16 bit signed integer	
4x004	Percent Speed	16 bit unsigned integer	
4x005	Flow Rate	16 bit unsigned integer	
4x006	Flow Total	32 bit unsigned double integer	

MODBUS ADDRESS	DATA	FORMAT	NOTES
4x008	Common Alarm Status 0 = No Alarms Present 1 = Alarm Present – Pumps Enabled 2 = Alarms Present – Pumps Disabled	16 bit unsigned integer	
4x009	Audible Alarm Horn Status 0 = Horn Off - No Alarms Present 1 = Horn On 2 = Horn Silenced - Alarms Still Present	16 bit unsigned integer	
4x010	Discharge Sensor Status 0 = Sensor Normal 1 = Sensor Failed	16 bit unsigned integer	
4x011	Supply Sensor Status 0 = Sensor Normal 1 = Sensor Failed	16 bit unsigned integer	
4x012	Discharge Pressure Alarm 0 = Pressure Normal 1 = Low Pressure Alarm 2 = High Pressure	16 bit unsigned integer	
4x013	Supply Pressure Alarm 0 = Pressure Normal 1 = Low Pressure Alarm 2 = High Pressure	16 bit unsigned integer	
4x014	Remote Disable Status 0 = System Enabled 1 = System Disabled from Terminal Board	16 bit unsigned integer	
4x015	Generator Lockout Status 0 = Generator Off 1 = Generator Running – System Limited	16 bit unsigned integer	
4x016	Pump#1 Status Word 0 = Ready, Stopped 1 = Running 2 = Failed 3 = Offline or Not Installed	16 bit unsigned integer	
4x017	Pump#2 Status Word 0 = Ready, Stopped 1 = Running 2 = Failed 3 = Offline or Not Installed	16 bit unsigned integer	
4x018	Pump#3 Status Word 0 = Ready, Stopped 1 = Running 2 = Failed 3 = Offline or Not Installed	16 bit unsigned integer	
4x026	Pump#1 Elapsed Run Time In Hours	32 bit unsigned double integer	
4x028	Pump#1 Elapsed Run Time In Hours	32 bit unsigned double integer	
4x030	Pump#1 Elapsed Run Time In Hours	32 bit unsigned double integer	

Note: A loss of communications indicates an active loss of power to the panel.

ABB ACH550 Series

Excerpt from ABB Manual

User’s Manual

ACH550-UH HVAC Drives (1…550 HP)

ACH550 Drive Manuals

GENERAL MANUALS

ACH550-UH HVAC User's Manual (1…550 HP)

- Safety
- Installation
- Start-Up
- Embedded Fieldbus
- Fieldbus Adapter
- Diagnostics
- Maintenance
- Technical Data

ACH550-PC/PD Packaged Drive with Disconnect Supplement for ACH550-UH HVAC User's Manual

- Safety
- Installation
- Start-Up
- Maintenance
- Technical Data

E-Bypass Configurations (BC, BD, VC or VD) for ACH550 Drives (1…400 HP)

- Safety
- Installation
- Start-Up
- Technical Data

OPTION MANUALS

(Fieldbus Adapters, I/O Extension Modules etc., manuals delivered with optional equipment)

Relay Output Extension Module (typical title)

- Installation
- Programming
- Fault tracing
- Technical data

BACnet is a registered trademark of ASHRAE.

CANopen is a registered trademark of CAN in Automation e.V.

ControlNet is a registered trademark of ControlNet International.

DeviceNet is a registered trademark of Open DeviceNet Vendor Association.

DRIVECOM is a registered trademark of DRIVECOM User Organization.

Interbus is a registered trademark of Interbus Club.

LonWorks is a registered trademark of Echelon Corp.

Metasys is a registered trademark of Johnson Controls Inc.

Modbus and Modbus Plus are registered trademarks of Schneider Automation Inc.

Profibus is a registered trademark of Profibus Trade Org.

Profibus-DP is a registered trademark of Siemens AG.

© 2004, 2005, 2006 ABB Inc. All Rights Reserved.

Safety

Warning! The ACH550 adjustable speed AC drive should ONLY be installed by a qualified electrician.

Warning! Even when the motor is stopped, dangerous voltage is present at the Power Circuit terminals U1, V1, W1 and U2, V2, W2 and, where present, UDC+, UDC-, BRK+ and BRK-.

Warning! Dangerous voltage is present when input power is connected. After disconnecting the supply, wait at least 5 minutes (to let the intermediate circuit capacitors discharge) before removing the cover.

Warning! Even when power is removed from the input terminals of the ACH550, there may be dangerous voltage (from external sources) on the terminals of the relay outputs R01...R03.

Warning! When the control terminals of two or more drive units are connected in parallel, the auxiliary voltage for these control connections must be taken from a single source which can either be one of the units or an external supply.

Warning! The ACH550 will start up automatically after an input voltage interruption if the external run command is on.

Warning! The heat sink may reach a high temperature. See "Technical Data" on page 262.

Warning! If the drive will be used in a floating network, remove screws at EM1 and EM3 (Frame size R1...R4), or F1 and F2 (Frame size R5 or R6). See diagrams on page 17 and page 18 respectively. Also see "Unsymmetrically Grounded Networks" and "Floating Networks" on page 270.

Warning! Do not attempt to install or remove EM1, EM3, F1 or F2 screws while power is applied to the drive's input terminals.

Note! For more technical information, contact the factory or your local ABB sales representative.

Use of Warnings and Notes

There are two types of safety instructions throughout this manual:

- Notes draw attention to a particular condition or fact, or give information on a subject.
- Warnings caution you about conditions which can result in serious injury or death and/or damage to the equipment. They also tell you how to avoid the danger. The warning symbols are used as follows:

Dangerous voltage warning warns of high voltage which can cause physical injury and/or damage to the equipment.

General warning warns about conditions, other than those caused by electricity, which can result in physical injury and/or damage to the equipment

Table of Contents

Safety

Use of Warnings and Notes 4

Table of Contents

Installation

Installation Flow Chart 7
Preparing for Installation 8
Installing the Drive 11

Start-Up

HVAC Control Panel Features 28
Start-Up 29
Modes 31
Application Macros 44
Parameter Descriptions 60

Embedded Fieldbus

Overview 154
Planning 155
Mechanical and Electrical Installation – EFB 156
Communication Set-up – EFB 157
Activate Drive Control Functions – EFB 160
Feedback from the Drive – EFB 165
Diagnostics – EFB 167
Modbus Protocol Technical Data 170
ABB Control Profiles Technical Data 178
N2 Protocol Technical Data 190
FLN Protocol Technical Data 198
BACnet Technical Data 212
BACnet Object Definitions 215

Fieldbus Adapter

Overview 224
Planning 226
Mechanical and Electrical Installation – FBA 227
Communication Set-up – FBA 228
Activate Drive Control Functions – FBA 228
Feedback from the Drive – FBA 231
Diagnostics – FBA 232
ABB Drives Profile Technical Data 234
Generic Profile Technical Data 242

Diagnostics

Diagnostic Displays 244
Correcting Faults 245
Correcting Alarms 251

Maintenance

Maintenance Intervals 254
Heatsink 254
Drive Module Fan Replacement 255
Enclosure Fan Replacement – UL Type 12 Enclosures 256
Enclosure Air Filter Replacement – UL Type 12 Enclosures 258
Capacitors 261
Control Panel 261

Technical Data

Ratings 262
Input Power Connections 266
Motor Connections 274
Control Connections 280
Efficiency 283
Cooling 283
Dimensions and Weights 285
Degrees of Protection 290
Ambient Conditions 291
Materials 292
Applicable Standards 293
Liability Limits 295

Index

Installation

Study these installation instructions carefully before proceeding. **Failure to observe the warnings and instructions may cause a malfunction or personal hazard.**

Warning! Before you begin read "Safety" on page 3.

Installation Flow Chart

The installation of the ACH550 adjustable speed AC drive follows the outline below. The steps must be carried out in the order shown. At the right of each step are references to the detailed information needed for the correct installation of the unit.

Task	See
PREPARE for installation	"Preparing for Installation" on page 8.
PREPARE the Mounting Location	"Prepare the Mounting Location" on page 11.
REMOVE the front cover	"Remove Front Cover" on page 13.
MOUNT the drive	"Mount the Drive" on page 14.
INSTALL wiring	"Wiring Overview" on page 15 and "Install the Wiring" on page 19.
CHECK installation	"Check Installation" on page 23.
RE-INSTALL the cover	"Re-install Cover" on page 23.
APPLY power	"Apply Power" on page 25.
START-UP	"Start-Up" on page 26.

Preparing for Installation

Lifting the Drive

R1…R6

Lift the drive only by the metal chassis.

IP2040

R7…R8

Warning! Handle and ship floor mounted enclosures only in the upright position. These units are not designed to be laid on their backs.

PC00005

1. Use a pallet truck to move the transport package/ enclosure to the installation site.
2. Remove the cabinet side panels for access to the cabinet/pallet mounting bolts. (6 torx screws hold each cabinet side panel in place. Leave the side panels off until later.)
3. Remove the 4 bolts that secure the cabinet to the shipping pallet.

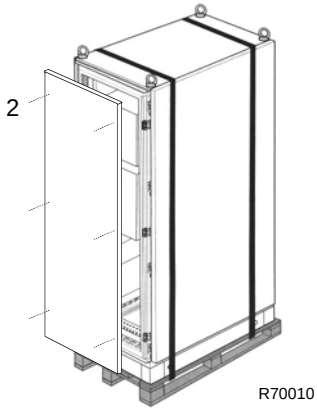

R70010

Warning! Use the lifting lugs/bars at the top of the unit to lift R7/R8 drives.

4. Use a hoist to lift the drive. (Do not place drive in final position until mounting site is prepared.

PC00003

Unpack the Drive

1. Unpack the drive.
2. Check for any damage and notify the shipper immediately if damaged components are found.
3. Check the contents against the order and the shipping label to verify that all parts have been received.

Drive Identification

Drive Labels

To determine the type of drive you are installing, refer to either:

- Serial number label attached on upper part of the chokeplate between the mounting holes.
- Type code label attached on the heat sink – on the right side of the enclosure.

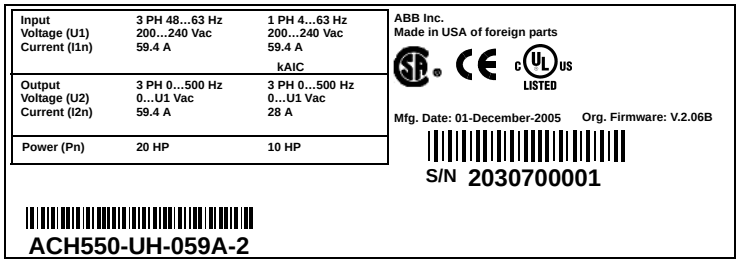

Type Code

Use the following chart to interpret the type code found on either label.

ACH550-UH-08A8-4+...

AC, HVAC Drive – 550 product series

Construction (region specific)
01 = Setup and parts specific to IEC installation and compliance
UH = Setup and parts specific to US installation and NEMA compliance

Output current rating
See Ratings chart for details

Voltage rating
2 = 208…240 VAC
4 = 380…480 VAC
6 = 500…600 VAC

Enclosure protection class
No specification = UL type 1 / NEMA 1 / IP 21
+B055 = UL type 12 / NEMA 12 / IP 54

Fieldbus Adapters
+K451 = DeviceNet Adapter
+K452 = LonWorks Adapter
+K454 = Profibus Adapter

I/O Options
+L502 = Pulse Encoder Interface
+L511 = Relay Output Extension
+L512 = 115/230 V Digital Input Interface

Ratings and Frame Size

Tables in the "Ratings" section on page 262 lists technical specifications, and identifies the drive's frame size. To read the Ratings table, you need the "Output current rating" entry from the type code (see above). Also, when using the Ratings tables, note that there are different tables for each drive "Voltage rating".

Motor Compatibility

The motor, drive, and supply power must be compatible:

Motor Specification	Verify	Reference
Motor type	3-phase induction motor	–
Nominal current	Motor value is within this range: 0.15…1.5 * I_{2N} (I_{2N} = normal use current)	• Type code label on drive, entry for Output I_{2N}, or • Type code on drive and rating table in "Technical Data" on page 262.
Nominal frequency	10…500 Hz	–
Voltage range	Motor is compatible with the ACH550 voltage range.	208…240 V (for ACH550-xx-xxxx-2) or 380…480 V (for ACH550-xx-xxxx-4) 500…600 V (for ACH550-xx-xxxx-6)
Insulation	500…600 V drives: Either the motor complies with NEMA MG1 Part 31, or a du/dt filter is used between the motor and drive.	For ACH550-xx-xxxx-6

Tools Required

To install the ACH550 you need the following:

- Screwdrivers (as appropriate for the mounting hardware used)
- Wire stripper
- Tape measure
- Drill
- Frame sizes R5…R8 with UL type 12 enclosure: Punch for conduit mounting holes
- Frame sizes R7/R8: pallet truck and hoist
- For installations involving frame size R6…R8: The appropriate crimping tool for power cable lugs. See "Power Terminal Considerations – R6 Frame Size".
- Mounting hardware: screws or nuts and bolts, four each. The type of hardware depends on the mounting surface and the frame size:

Frame Size	Mounting Hardware		Note
R1…R4	M5	#10	
R5	M6	1/4 in	
R6	M8	5/16 in	
R7…R8	M10	7/16	Secures free standing cabinets if required.

- For installations involving frame size R7…R8: Hoist.

Suitable Environment and Enclosure

Confirm that the site meets the environmental requirements. To prevent damage prior to installation, store and transport the drive according to the environmental

requirements specified for storage and transportation. See "Ambient Conditions" on page 291.

Confirm that the enclosure is appropriate, based on the site contamination level:

- UL type 1 enclosure. The site must be free of airborne dust, corrosive gases or liquids, and conductive contaminants such as condensation, carbon dust, and metallic particles.
- UL type 12 enclosure. This enclosure provides protection from airborne dust and light sprays or splashing water from all directions.

Suitable Mounting Location

Confirm that the mounting location meets the following constraints:

- R1…R6: The drive must be mounted vertically on a smooth, solid surface, and in a suitable environment as defined above.
- The drive must be located in a suitable environment as defined above.
- The minimum space requirements for the drive are the outside dimensions (see "Outside Dimensions – R1…R6" on page 288 or "Outside Dimensions – R7…R8" on page 289), plus air flow space around the unit (see "Cooling" on page 283).
- The distance between the motor and the drive is limited by the maximum motor cable length. See either "Motor Connection Specifications" on page 274, or "EN 61800-3 Compliant Motor Cables" on page 277.
- The mounting site must support the drive's weight. See "Weight" on page 287.

Installing the Drive

Warning! Before installing the ACH550, ensure the input power supply to the drive is off.

Warning! Metal shavings or debris in the enclosure can damage electrical equipment and create a hazardous condition. Where parts, such as conduit plates require cutting or drilling, first remove the part. If that is not practical, cover nearby electrical components to protect them from all shavings or debris.

Prepare the Mounting Location

The ACH550 should only be mounted where all of the requirements defined in "Preparing for Installation" on page 8 are met.

1. Mark the position of the mounting holes.

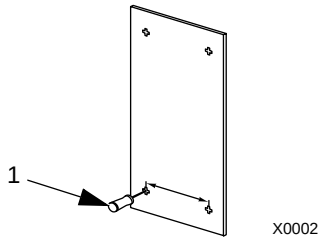

Note! Frame sizes R3 and R4 have four holes along the top. Use only two. If possible, use the two outside holes (to allow room to remove the fan for maintenance).

Note! ACH400 drives can be replaced using the original mounting holes. For R1 and R2 frame sizes, the mounting holes are identical. For R3 and R4 frame sizes, the inside mounting holes on the top of ACH550 drives match ACH400 mounts.

Note! Frame sizes R7 and R8 have mounting holes inside the enclosure base. See "Mounting Dimensions" on page 286.

Where it is not possible to use either mounting hole at the back of the base, use an L-bracket at the top of the enclosure to secure the cabinet to a wall or to the back of another enclosure. Bolt the L-bracket to the enclosure using the lifting lug bolt hole on the top of the enclosure.

2. Drill holes of appropriate size in the mounting location.

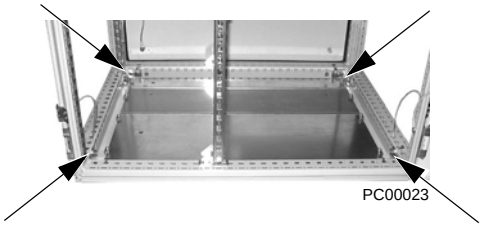

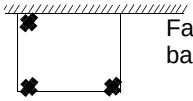

Fastening points when installed back against a wall (Top view)

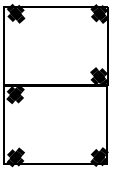

Fastening points when installed back against back

Fastening the cabinet at the top using L-brackets (side view)

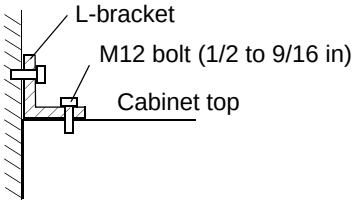

Remove Front Cover

R1…R6, *UL type 1*

1. Remove the control panel, if attached.
2. Loosen the captive screw at the top.
3. Pull near the top to remove the cover.

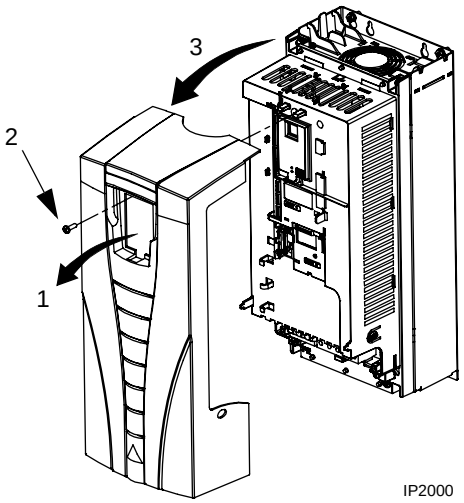

R1…R6, *UL type 12*

1. If hood is present: Remove screws (2) holding the hood in place.
2. If hood is present: Slide hood up and off of the cover.
3. Loosen the captive screws around the edge of the cover.
4. Remove the cover.

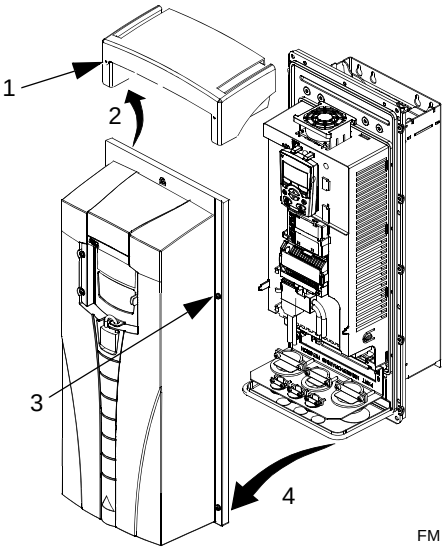

R7…R8, Cabinet Door

1. To open the cabinet door, loosen the quarter-turn screws that hold the cabinet door closed.

R7…R8, Side Panels

The side panels were removed to take the cabinet off the pallet. Installation access is easier if these panels are kept off throughout the installation.

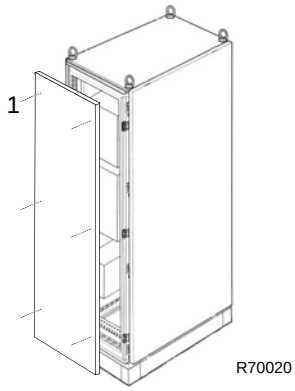

Mount the Drive

R1…R6, *UL type 1*

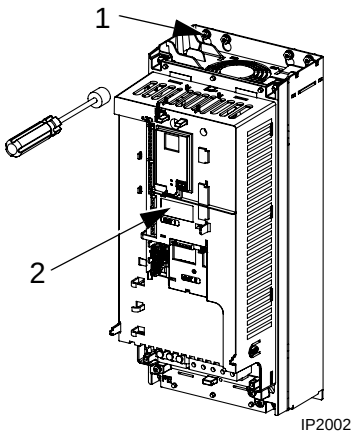

1. Position the ACH550 onto the mounting screws or bolts and securely tighten in all four corners.

   Note! Lift the ACH550 by its metal chassis.

2. Non-English speaking locations: Add a warning sticker in the appropriate language over the existing warning on the top of the module.

R1…R6, *UL type 12*

For the UL type 12 enclosures, rubber plugs are required in the holes provided for access to the drive mounting slots.

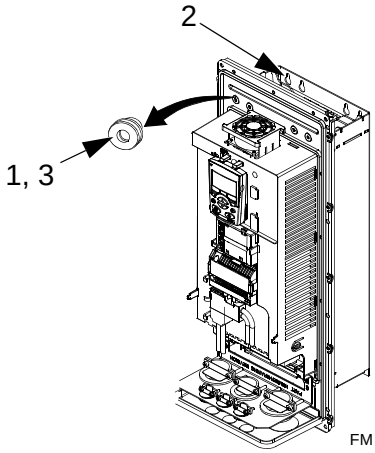

1. As required for access, remove the rubber plugs. Push plugs out from the back of the drive.
2. R5 & R6: Align the sheet metal hood (not shown) in front of the drive's top mounting holes. (Attach as part of next step.)
3. Position the ACH550 onto the mounting screws or bolts and securely tighten in all four corners.

   Note! Lift the ACH550 by its metal chassis.

4. Re-install the rubber plugs.
5. Non-English speaking locations: Add a warning sticker in the appropriate language over the existing warning on the top of the module.

R7…R8

1. Use a hoist to move the cabinet into position.

   Note! If the cabinet location does not provide access to the cabinet sides, be sure to re-mount side panels before positioning cabinet.

2. Install and tighten mounting bolts.

Wiring Overview

Conduit Kit

Wiring R1…R6 drives with the UL type 1 Enclosure requires a conduit kit with the following items:

- conduit box
- screws
- cover

The kit is included with UL type 1 Enclosures.

Wiring Requirements

Warning! Ensure the motor is compatible for use with the ACH550. The ACH550 must be installed by a competent person in accordance with the considerations defined in "Preparing for Installation" on page 8. If in doubt, contact your local ABB sales or service office.

As you install the wiring, observe the following:

- There are two sets of wiring instructions – one set for each enclosure type (UL type 1 and UL type 12). Be sure to select the appropriate procedure.
- For the power connection points on the drive see the "Connection Diagrams" section below.
- Use separate, metal conduit runs to keep these three classes of wiring apart:
  - Input power wiring.
  - Motor wiring.
  - Control/communications wiring.
- When installing input power and motor wiring, refer to the following, as appropriate:

Terminal	Description	Specifications and Notes
U1, V1, W1*	3-phase power supply input	"Input Power Connections" on page 266.
PE	Protective Ground	"Ground Connections" on page 270.
U2, V2, W2	Power output to motor	"Motor Connections" on page 274.

* The ACH550 -xx-xxxx-2 (208…240V series) can be used with a single phase supply, if output current is derated by 50%. For single phase supply voltage connect power at U1 and W1.

- To locate input power and motor connection terminals, see "Connection Diagrams" starting on page 17. For specifications on power terminals, see "Drive's Power Connection Terminals" on page 272.
- For frame sizes R1…R4 in unsymmetrically grounded networks, see "Unsymmetrically Grounded Networks" on page 270.
- For floating (or impedance grounded) networks, see "Floating Networks" on page 271.

- For frame size R6, see "Power Terminal Considerations – R6 Frame Size" on page 272 to install the appropriate cable lugs.
- For details on control connections, refer to the following sections:
  - "Control Connections" on page 280.
  - "Application Macros" starting on page 44.
  - "Parameter Descriptions" on page 60.
  - "Embedded Fieldbus" on page 154.
  - "Fieldbus Adapter" on page 224.
- For electro-magnetic compliance (EMC), follow local codes and the requirements in "Motor Cable Requirements for CE & C-Tick Compliance" on page 276. For example:
  - Properly ground the wire screen cable shields.
  - Keep individual un-screened wires between the cable clamps and the screw terminals as short as possible.
  - Route control cables away from power cables.

Connection Diagrams

The following diagrams show:

- The terminal layout for frame size R3, which, in general, applies to frame sizes R1...R6, except for the R5/R6 power and ground terminals.
- The R5/R6 power and ground terminals.
- The terminal layout for R7/R8.

R1…R4 (Diagram shows the R3 frame.)

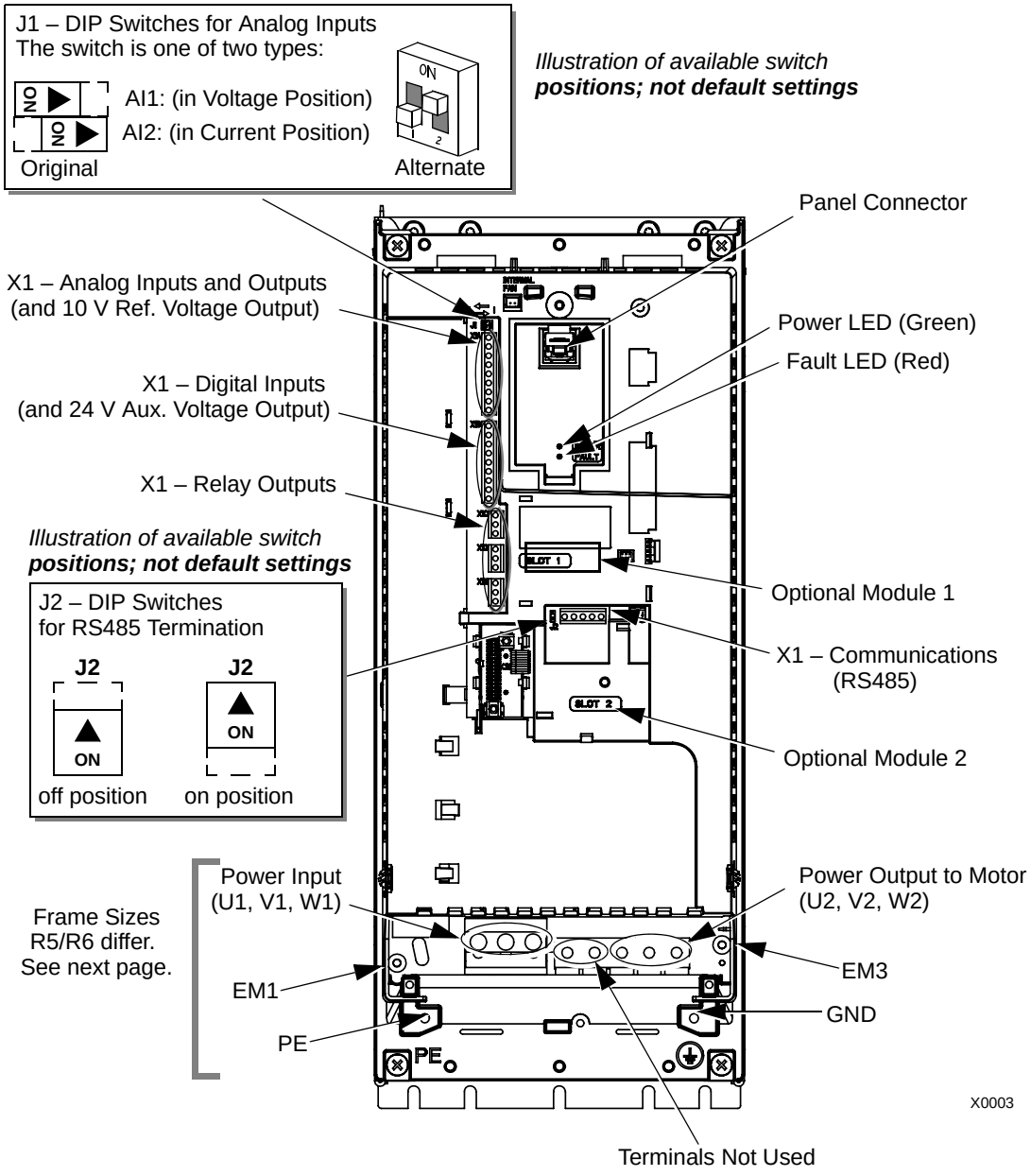

Warning! For floating, impedance grounded, or unsymmetrically grounded networks, disconnect the internal RFI filter by removing: screw EM1 (drive is shipped with EM3 already removed). See "Floating Networks" on page 271.

The following diagram shows the power and ground terminal layout for frame sizes R5 and R6

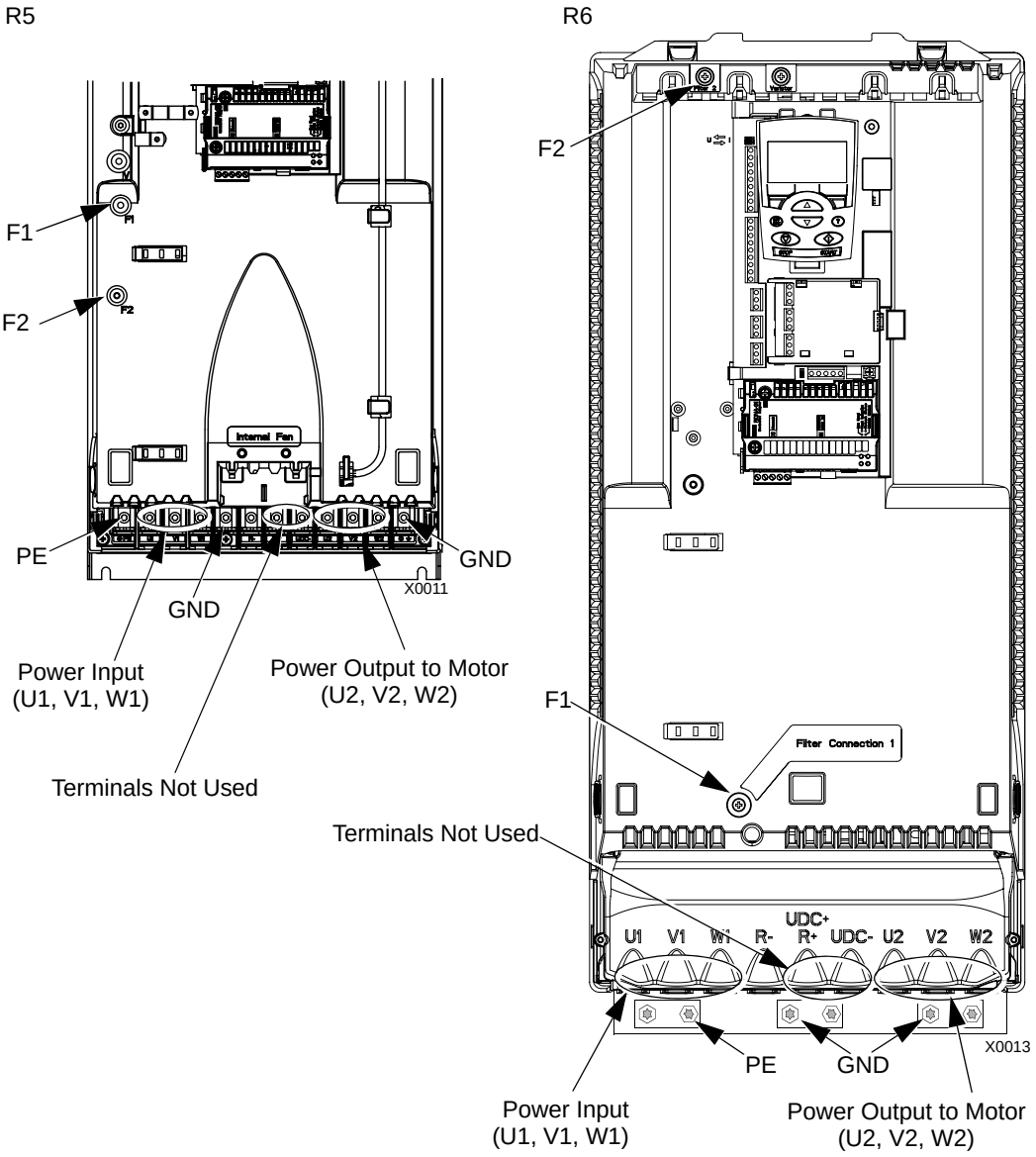

Warning! For floating, impedance grounded, or unsymmetrically grounded networks, disconnect the internal RFI filter by removing screws: F1 and F2. See "Floating Networks" on page 271.

The following diagram shows the power and ground terminal layout for frame size R7 (R8 is similar).

R7

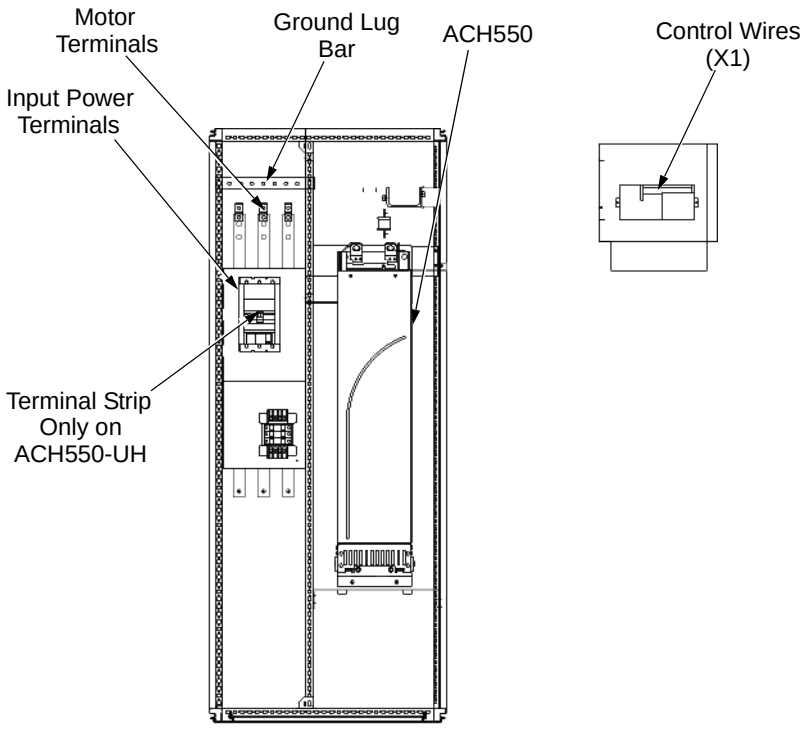

Install the Wiring

Checking Motor and Motor Cable Insulation

Warning! Check the motor and motor cable insulation before connecting the drive to input power. For this test, make sure that motor cables are NOT connected to the drive.

1. Complete motor cable connections to the motor, but NOT to the drive output terminals (U2, V2, W2).
2. At the drive end of the motor cable, measure the insulation resistance between each motor cable phase and Protective Earth (PE): Apply a voltage of 1 kV DC and verify that resistance is greater than 1 Mohm.

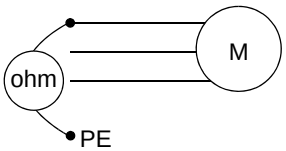

R1…R6, Wiring UL type 1 Enclosure

1. Open the appropriate knockouts in the conduit box. (See "Conduit Kit" above.)
2. Install thin-wall conduit clamps (not supplied).

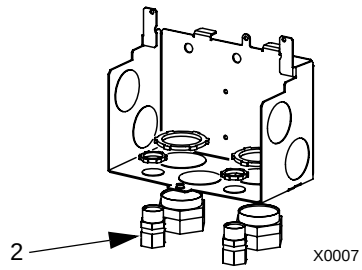

3. Install conduit box.
4. Connect conduit runs for input power, motor and control cables to the box.

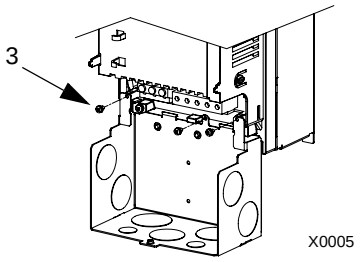

5. Route input power and motor wiring through separate conduits.
6. Strip wires.
7. Connect power, motor, and ground wires to the drive terminals. See "Wiring Requirements" on page 15.

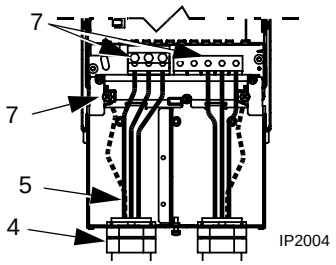

Note! For R5 frame size, the minimum power cable size is 25 mm^2 (4 AWG). For R6 frame size, refer to "Power Terminal Considerations – R6 Frame Size" on page 272.

---

8. Route the control cables through the conduit (not the same conduit as either input power or motor wiring).
9. Strip the control cable sheathing and twist the copper screen into a pig-tail.
10. Connect the ground screen pig-tail for digital and analog I/O cables at X1-1. (Ground only at drive end.)
11. Connect the ground screen pig-tail for RS485 cables at X1-28 or X1-32. (Ground only at drive end.)
12. Strip and connect the individual control wires to the drive terminals. See "Wiring Requirements" on page 15.
13. Install the conduit box cover (1 screw).

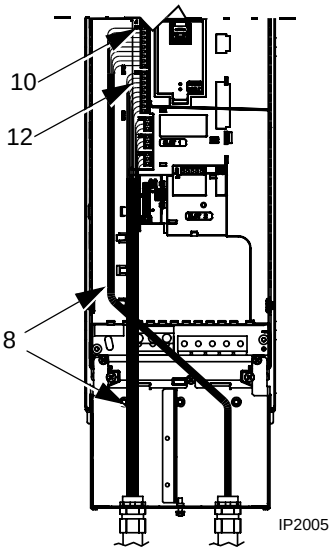

R1…R6, Wiring UL type 12 Enclosure

1. Step depends on Frame Size:
   - Frame Sizes R1…R4: Remove and discard the cable seals where conduit will be installed. (The cable seals are cone-shaped, rubber seals on the bottom of the drive.)
   - Frame Sizes R4 and R5: Use punch to create holes for conduit connections as needed.

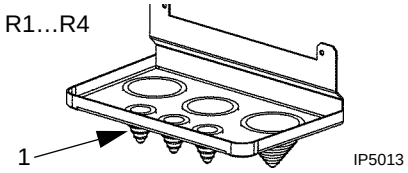

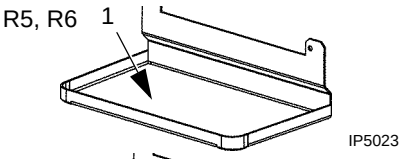

2. For each conduit run (input power, motor and control wiring must be separate), install water tight conduit connectors (not supplied).

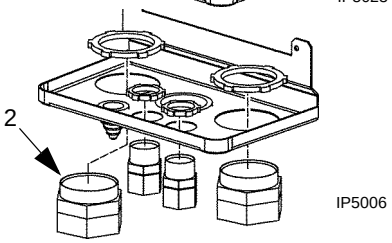

3. Route the power wiring through conduit.
4. Route the motor wiring through conduit (not the same conduit as input power wiring run).
5. Strip the wires.
6. Connect the power, motor, and ground wires to the drive terminals. See "Wiring Requirements" on page 15, and "Connection Diagrams" on page 17.

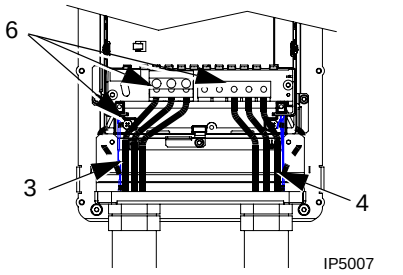

Note! For R5 frame size, the minimum power cable size is 25 mm^2 (4 AWG). For R6 frame size, refer to "Power Terminal Considerations – R6 Frame Size" on page 272.

---

7. Route the control cables through the conduit (not the same conduit as either input power or motor wiring runs).
8. Strip the control cable sheathing and twist the copper screen into a pig-tail.
9. Connect the ground screen pig-tail for digital and analog I/O cables at X1-1. (Ground only at drive end.)
10. Connect the ground screen pig-tail for RS485 cables at X1-28 or X1-32. (Ground only at drive end.)
11. Strip and connect the individual control wires to the drive terminals. See "Wiring Requirements" on page 15.
12. Install the conduit box cover (1 screw).

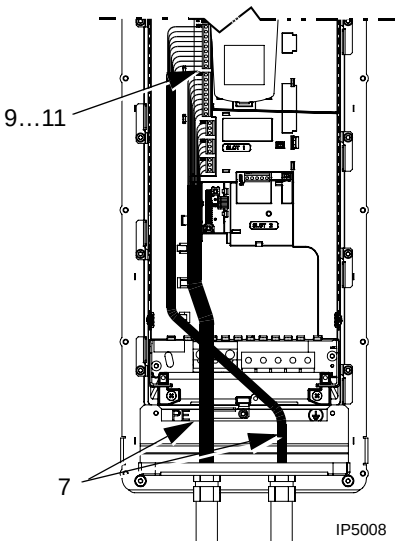

R7…R8, Wiring (Both Enclosure Types)

The figures show connections in the R7 cabinet, the R8 cabinet is similar.

1. Remove the conduit connection plate from the top of the left bay.
2. Route the input power, motor and control cables to the top of the cabinet. Each cable type (input power, motor, and control) must be in separate conduit.
3. Use punch to create holes for conduit connections as needed.
4. UL type 12 Enclosure: For each conduit run (input power, motor and control wiring must be separate), install water tight conduit connectors (not supplied).
5. Connect input power and motor cables to the bus terminals. See "Wiring Requirements" on page 15, and "Connection Diagrams" on page 17.

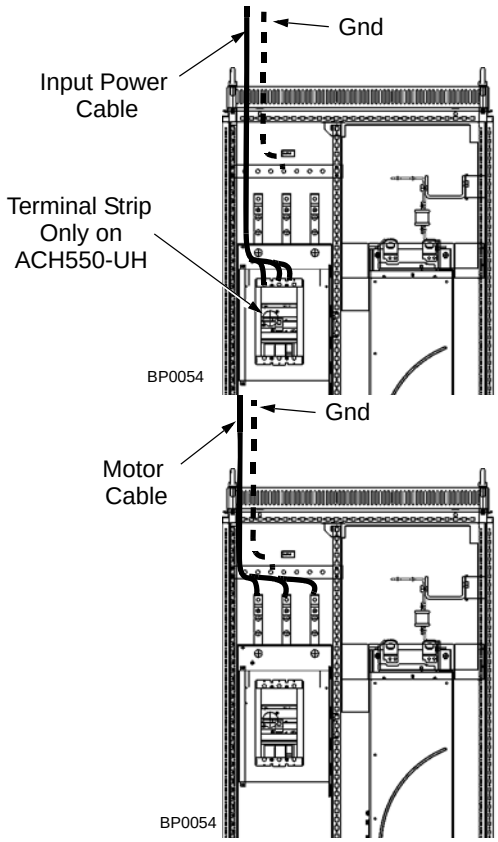

6. Connect grounds to ground bar.
7. Strip the control cable sheathing and twist the copper screen into a pig-tail.
8. Connect the ground screen pig-tail for digital and analog I/O cables at X1-1. (Ground only at drive end.)
9. Connect the ground screen pig-tail for RS485 cables at X1-28 or X1-32. (Ground only at drive end.)
10. Strip and connect the individual control wires to the drive terminals. See "Wiring Requirements" on page 15.

Check Installation

Before applying power, perform the following checks.

✓	Check
	Installation environment conforms to the drive's specifications for ambient conditions.
	The drive is mounted securely.
	Space around the drive meets the drive's specifications for cooling.
	The motor and driven equipment are ready for start.
	For floating networks (R1…R6): The internal RFI filter is disconnected (screws EM1 & EM3 or F1 & F2).
	The drive is properly grounded.
	The input power voltage matches the drive nominal input voltage range.
	The input power connections at U1, V1, and W1 are connected and tightened as specified.
	The input power branch circuit protection is installed.
	The motor connections at U2, V2, and W2 are connected and tightened as specified.
	The input power, motor and control wiring are routed through separate conduit runs.
	NO power factor compensation capacitors are in the motor cable.
	The control connections are connected and tightened as specified.
	NO tools or foreign objects (such as drill shavings) are inside the drive.
	NO alternate power source for the motor (such as a bypass connection) is connected – no voltage is applied to the output of the drive.

Re-install Cover

R1…R6, UL type 1

1. Align the cover and slide it on.
2. Tighten the captive screw.
3. Re-install the control panel.

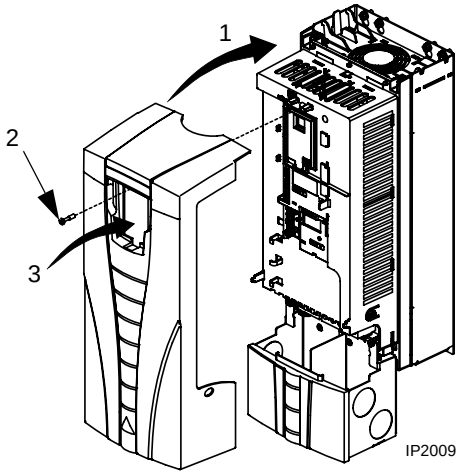

R1…R6, UL type 12

1. Align the cover and slide it on.
2. Tighten the captive screws around the edge of the cover.
3. R1…R4: Slide the hood down over the top of the cover.
4. R1…R4: Install the two screws that attach the hood.
5. Re-install the control panel.

Note! The control panel window must be closed to comply with UL type 12.

---

6. Optional: Add a lock (not supplied) to secure the control panel window.

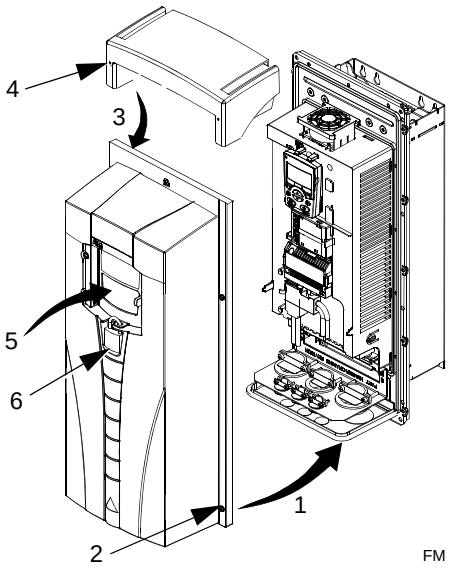

R7…R8, Covers

1. If side panels were removed and not remounted, mount them now. Each panel requires 6 torx screws.
2. Re-mount all high voltage shields.
3. Close all internal swing-out panels and secure in place with the quarter-turn screws.
4. Close the cabinet door and secure in place with the quarter-turn screws.

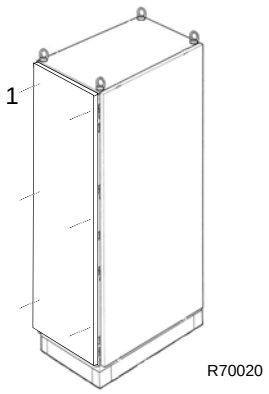

Diagnostics

Warning! Do not attempt any measurement, parts replacement or other service procedure not described in this manual. Such action will void the warranty, may endanger correct operation, and increase downtime and expense.

Warning! All electrical installation and maintenance work described in this chapter should only be undertaken by qualified service personnel. The Safety instructions on the first pages of this manual must be followed.

Diagnostic Displays

The drive detects error situations and reports them using:

- The green and red LED on the body of the drive
- The status LED on the control panel (if the HVAC control panel is attached to the drive)
- The control panel display (if the HVAC control panel is attached to the drive)
- The Fault Word and Alarm Word parameter bits (parameters 0305 to 0309). See "Group 03: Actual Signals" on page 66.

The form of the display depends on the severity of the error. You can specify the severity for many errors by directing the drive to:

- Ignore the error situation.
- Report the situation as an alarm.
- Report the situation as a fault.

Red – Faults

The drive signals that it has detected a severe error, or fault, by:

- Enabling the red LED on the drive (LED is either steady on or blinking).
- Setting an appropriate bit in a Fault Word parameter (0305 to 0307).
- Overriding the control panel display with the display of a fault code.
- Stopping the motor (if it was on).

The fault code on the control panel display is temporary. Pressing any of the following buttons removes the fault message: MENU, ENTER, UP button or DOWN button. The message reappears after a few seconds if the control panel is not touched and the fault is still active.

Flashing Green – Alarms

For less severe errors, called alarms, the diagnostic display is advisory. For these situations, the drive is simply reporting that it had detected something "unusual." In these situations, the drive:

- Flashes the green LED on the drive (does not apply to alarms that arise from control panel operation errors).
- Sets an appropriate bit in an Alarm Word parameter (0308 or 0309). See "Group 03: Actual Signals" on page 66 for the bit definitions.
- Overrides the control panel display with the display of an alarm code and/or name.

Alarm messages disappear from the control panel display after a few seconds. The message returns periodically as long as the alarm condition exists.

Correcting Faults

The recommended corrective action for faults is:

- Use the "Fault Listing" table below to find and address the root cause of the problem.
- Reset the drive. See "Fault Resetting" on page 250.

Fault Listing

Fault Code	Fault Name In Panel	Description and Recommended Corrective Action
1	OVERCURRENT	Output current is excessive. Check for and correct: • Excessive motor load. • Insufficient acceleration time (parameters 2202 ACCELER TIME 1 and 2205 ACCELER TIME 2). • Faulty motor, motor cables or connections.
2	DC OVERVOLT	Intermediate circuit DC voltage is excessive. Check for and correct: • Static or transient overvoltages in the input power supply. • Insufficient deceleration time (parameters 2203 DECELER TIME 1 and 2206 DECELER TIME 2). • Verify that overvoltage controller is ON (using parameter 2005).
3	DEV OVERTEMP	Drive heatsink is overheated. Temperature is at or above limit. R1…R4 & R7/R8: 115 °C (239 °F) R5/R6: 125 °C (257 °F) Check for and correct: • Fan failure. • Obstructions in the air flow. • Dirt or dust coating on the heat sink. • Excessive ambient temperature. • Excessive motor load.
4	SHORT CIRC	Fault current. Check for and correct: • A short-circuit in the motor cable(s) or motor. • Supply disturbances.

Fault Code	Fault Name In Panel	Description and Recommended Corrective Action
5	RESERVED	Not used.
6	DC UNDERVOLT	Intermediate circuit DC voltage is not sufficient. Check for and correct: • Missing phase in the input power supply. • Blown fuse. • Undervoltage on mains.
7	AI1 LOSS	Analog input 1 loss. Analog input value is less than AI1FLT LIMIT (3021). Check for and correct: • Source and connection for analog input. • Parameter settings for AI1FLT LIMIT (3021) and 3001 AI<MIN FUNCTION.
8	AI2 LOSS	Analog input 2 loss. Analog input value is less than AI2FLT LIMIT (3022). Check for and correct: • Source and connection for analog input. • Parameter settings for AI2FLT LIMIT (3022) and 3001 AI<MIN FUNCTION.
9	MOT TEMP	Motor is too hot, based on either the drive's estimate or on temperature feedback. • Check for overloaded motor. • Adjust the parameters used for the estimate (3005…3009). • Check the temperature sensors and Group 35 parameters.
10	PANEL LOSS	Panel communication is lost and either: • Drive is in local control mode (the control panel displays HAND), or • Drive is in remote control mode (REM) and is parameterized to accept start/stop, direction or reference from the control panel. To correct check: • Communication lines and connections • Parameter 3002 PANEL COMM ERROR. • Parameters in Group 10: Command Inputs and Group 11: Reference Select (if drive operation is REM).
11	ID RUN FAIL	The motor ID run was not completed successfully. Check for and correct: • Motor connections • Motor parameters 9905…9909
12	MOTOR STALL	Motor or process stall. Motor is operating in the stall region. Check for and correct: • Excessive load. • Insufficient motor power. • Parameters 3010…3012.
14	EXTERNAL FLT 1	Digital input defined to report first external fault is active. See parameter 3003 EXTERNAL FAULT 1.
15	EXTERNAL FLT 2	Digital input defined to report second external fault is active. See parameter 3004 EXTERNAL FAULT 2.

Fault Code	Fault Name In Panel	Description and Recommended Corrective Action
16	EARTH FAULT	Possible ground fault detected in the motor or motor cables. The drive monitors for ground faults while the drive is running and while the drive is not running. Detection is more sensitive when the drive is not running and can produce false positives. Possible corrections: • Check for/correct faults in the input wiring. • Verify that motor cable does not exceed maximum specified length. • A delta grounded input power supply and motor cables with high capacitance may result in erroneous error reports during non-running tests. To disable response to fault monitoring when the drive is not running, use parameter 3023 WIRING FAULT. To disable response to all ground fault monitoring, use parameter 3017 EARTH FAULT.
17	UNDERLOAD	Motor load is lower than expected. Check for and correct: • Disconnected load. • Parameters 3013 UNDERLOAD FUNCTION…3015 UNDERLOAD CURVE.
18	THERM FAIL	Internal fault. The thermistor measuring the internal temperature of the drive is open or shorted. Contact your local ABB sales representative.
19	OPEX LINK	Internal fault. A communication-related problem has been detected on the fiber optic link between the OITF and OINT boards. Contact your local ABB sales representative.
20	OPEX PWR	Internal fault. Low voltage condition detected on OINT power supply. Contact your local ABB sales representative.
21	CURR MEAS	Internal fault. Current measurement is out of range. Contact your local ABB sales representative.
22	SUPPLY PHASE	Ripple voltage in the DC link is too high. Check for and correct: • Missing mains phase. • Blown fuse.
23	ENCODER ERR	Not used (Available only with encoder and parameter group 50).
23	ENCODER ERR	The drive is not detecting a valid encoder signal. Check for and correct: • Encoder presence and proper connection (reverse wired, loose connection, or short circuit). • Voltage logic levels are outside of the specified range. • A working and properly connected Pulse Encoder Interface Module, OTAC-01. • Wrong value entered in parameter 5001 PULSE NR. A wrong value will only be detected if the error is such that the calculated slip is greater than 4 times the rated slip of the motor. • Encoder is not being used, but parameter 5002 ENCODER ENABLE = 1 (ENABLED).
24	OVERSPEED	Motor speed is greater than 120% of the larger (in magnitude) of 2001 MINIMUM SPEED or 2002 MAXIMUM SPEED. Check for and correct: • Parameter settings for 2001 and 2002. • Adequacy of motor braking torque. • Applicability of torque control. • Brake chopper and resistor.
25	RESERVED	Not used as of the publication of this manual.
26	DRIVE ID	Internal fault. Configuration Block Drive ID is not valid. Contact your local ABB sales representative.

Fault Code	Fault Name In Panel	Description and Recommended Corrective Action
27	CONFIG FILE	Internal configuration file has an error. Contact your local ABB sales representative.
28	SERIAL 1 ERR	Fieldbus communication has timed out. Check for and correct: • Fault setup (3018 COMM FAULT FUNC and 3019 COMM FAULT TIME). • Communication settings (Group 51 or 53 as appropriate). • Poor connections and/or noise on line.
29	EFB CONFIG FILE	Error in reading the configuration file for the embedded fieldbus.
30	FORCE TRIP	Fault trip forced by the fieldbus. See the fieldbus User's Manual.
31	EFB 1	Fault code reserved for the embedded fieldbus (EFB) protocol application. These codes are not used as of the publication of this manual.
32	EFB 2	
33	EFB 3	
34	MOTOR PHASE	Fault in the motor circuit. One of the motor phases is lost. Check for and correct: • Motor fault. • Motor cable fault. • Thermal relay fault (if used). • Internal fault.
35	OUTPUT WIRING	Possible power wiring error detected. When the drive is not running it monitors for an improper connection between the drive input power and the drive output. Check for and correct: • Proper input wiring – line voltageis NOT connected to drive output. • The fault can be erroneously declared if the input power is a delta grounded system and motor cable capacitance is large. This fault can be disabled using parameter 3023 WIRING FAULT.
36	INCOMP SWTYPE	The drive cannot use the software. • Internal Fault. • The loaded software is not compatible with the drive. • Call support representative.
37	CB OVERTEMP	Drive control board is overheated. Check for and correct: • Excessive ambient temperatures • Fan failure. • Obstructions in the air flow.
101	SERF CORRUPT	Error internal to the drive. Contact your local ABB sales representative and report the error number.
102	RESERVED	
103	SERF MACRO	
104	RESERVED	
105	RESERVED	

Fault Code	Fault Name In Panel	Description and Recommended Corrective Action
201	DSP T1 OVERLOAD	Error in the system. Contact your local ABB sales representative and report the error number.
202	DSP T2 OVERLOAD	
203	DSP T3 OVERLOAD	
204	DSP STACK ERROR	
205	RESERVED (obsolete)	
206	OMIO ID ERROR	
207	EFB LOAD ERR	
1000	PAR HZRPM LIMITS	Parameter values are inconsistent. Check for any of the following: • 2001 MINIMUM SPEED > 2002 MAXIMUM SPEED. • 2007 MINIMUM FREQ > 2008 MAXIMUM FREQ. • 2001 MINIMUM SPEED / 9908 MOTOR NOM SPEED is outside proper range (> 50) • 2002 MAXIMUM SPEED / 9908 MOTOR NOM SPEED is outside proper range (> 50) • 2007 MINIMUM FREQ / 9907 MOTOR NOM FREQ is outside proper range (> 50) • 2008 MAXIMUM FREQ / 9907 MOTOR NOM FREQ is outside proper range (> 50)
1001	PAR PFAREFNG	Parameter values are inconsistent. Check for the following: • 2007 MINIMUM FREQ is negative, when 8123 PFA ENABLE is active.
1002	RESERVED (Obsolete)	
1003	PAR AI SCALE	Parameter values are inconsistent. Check for any of the following: • 1301 AI 1 MIN > 1302 AI 1 MAX. • 1304 AI 2 MIN > 1305 AI 2 MAX.
1004	PAR AO SCALE	Parameter values are inconsistent. Check for any of the following: • 1504 AO 1 MIN > 1505 AO 1 MAX. • 1510 AO 2 MIN > 1511 AO 2 MAX.
1005	PAR PCU 2	Parameter values for power control are inconsistent: Improper motor nominal kVA or motor nominal power. Check for the following: • $1.1 \leq$ (9906 MOTOR NOM CURR * 9905 MOTOR NOM VOLT * 1.73 / P_N) ≤ 3.0 • Where: P_N = 1000 * 9909 MOTOR NOM POWER (if units are kW) or P_N = 746 * 9909 MOTOR NOM POWER (if units are HP, e.g. in US)
1006	EXT ROMISSING	Parameter values are inconsistent. Check for the following: • Extension relay module not connected and • 1410…1412 RELAY OUTPUTS 4…6 have non-zero values.
1007	PAR FBUSMISSING	Parameter values are inconsistent. Check for and correct: • A parameter is set for fieldbus control (e.g. 1001 EXT1 COMMANDS = 10 (COMM)), but 9802 COMM PROT SEL = 0.
1008	PAR PFAWOSCALAR	Parameter values are inconsistent – 9904 MOTOR CTRL MODE must be = 3 (SCALAR: SPEED), when 8123 PFA ENABLE is activated.

Fault Code	Fault Name In Panel	Description and Recommended Corrective Action
1009	PAR PCU1	Parameter values for power control are inconsistent: Improper motor nominal frequency or speed. Check for both of the following: • 1 ≤ (60 * 9907 MOTOR NOM FREQ / 9908 MOTOR NOM SPEED ≤ 16 • 0.8 ≤ 9908 MOTOR NOM SPEED / (120 * 9907 MOTOR NOM FREQ / Motor Poles) ≤ 0.992
1010	PAR PFA OVERRIDE	Both the override mode and PFA are activated at the same time. These modes are mutually incompatible, because PFA interlocks cannot be observed in the override mode.
1011	PAR OVERRIDE PARS	Overeride is enabled, but parameters are incompatible. Verify that1701 is not zero, and (depending on 9904 value) 1702 or 1703 is not zero.
1012	PAR PFC IO 1	IO configuration is not complete – not enough relays are parameterized to PFC. Or, a conflict exists between Group 14, parameter 8117, NR OF AUX MOT, and parameter 8118, AUTOCHNG INTERV.
1013	PAR PFC IO 2	IO configuration is not complete – the actual number of PFC motors (parameter 8127, MOTORS) does not match the PFC motors in Group 14 and parameter 8118 AUTOCHNG INTERV.
1014	PAR PFC IO 3	IO configuration is not complete – the drive is unable to allocate a digital input (interlock) for each PFC motor (parameters 8120 INTERLOCKS and 8127 MOTORS).

Fault Resetting

The ACH550 can be configured to automatically reset certain faults. Refer to parameter Group 31: Automatic Reset.

Warning! If an external source for start command is selected and it is active, the ACH550 may start immediately after fault reset.

Flashing Red LED

To reset the drive for faults indicated by a flashing red LED:

- Turn off the power for 5 minutes.

Red LED

To reset the drive for faults indicated by a red LED (on, not flashing), correct the problem and do one of the following:

- From the control panel, press RESET
- Turn off the power for 5 minutes.

Depending on the value of 1604, FAULT RESET SELECT, the following could also be used to reset the drive:

- Digital input
- Serial communication

When the fault has been corrected, the motor can be started.

History

For reference, the last three fault codes are stored into parameters 0401, 0412, 0413. For the most recent fault (identified by parameter 0401), the drive stores additional data (in parameters 0402…0411) to aid in troubleshooting a problem. For example, parameter 0404 stores the motor speed at the time of the fault.

To clear the fault history (all of the Group 04, Fault History parameters):

1. Using the control panel in Parameters mode, select parameter 0401.
2. Press EDIT.
3. Press UP and Down simultaneously.
4. Press SAVE.

Correcting Alarms

The recommended corrective action for alarms is:

- Determine if the Alarm requires any corrective action (action is not always required).
- Use "Alarm Listing" below to find and address the root cause of the problem.

Alarm Listing

The following table lists the alarms by code number and describes each.

Alarm Code	Display	Description
2001	OVERCURRENT	Current limiting controller is active. Check for and correct: • Excessive motor load. • Insufficient acceleration time (parameters 2202 ACCELER TIME 1 and 2205 ACCELER TIME 2). • Faulty motor, motor cables or connections.
2002	OVERVOLTAGE	Over voltage controller is active. Check for and correct: • Static or transient overvoltages in the input power supply. • Insufficient deceleration time (parameters 2203 DECELER TIME 1 and 2206 DECELER TIME 2).
2003	UNDERVOLTAGE	Under voltage controller is active. Check for and correct: • Undervoltage on mains.
2004	DIR LOCK	The change in direction being attempted is not allowed. Either: • Do not attempt to change the direction of motor rotation, or • Change parameter 1003 DIRECTION to allow direction change (if reverse operation is safe).
2005	I/O COMM	Fieldbus communication has timed out. Check for and correct: • Fault setup (3018 COMM FAULT FUNC and 3019 COMM FAULT TIME). • Communication settings (Group 51 or 53 as appropriate). • Poor connections and/or noise on line.

Alarm Code	Display	Description
2006	AI1 LOSS	Analog input 1 is lost, or value is less than the minimum setting. Check: • Input source and connections • Parameter that sets the minimum (3021) • Parameter that sets the Alarm/Fault operation (3001)
2007	AI2 LOSS	Analog input 2 is lost, or value is less than the minimum setting. Check: • Input source and connections • Parameter that sets the minimum (3022) • Parameter that sets the Alarm/Fault operation (3001)
2008	PANEL LOSS	Panel communication is lost and either: • Drive is in local control mode (the control panel displays LOC), or • Drive is in remote control mode (REM) and is parameterized to accept start/stop, direction or reference from the control panel. To correct check: • Communication lines and connections • Parameter 3002 PANEL LOSS. • Parameters in groups 10 COMMAND INPUTS and 11 REFERENCE SELECT (if drive operation is REM).
2009	DEVICE OVERTEMP	Drive heatsink is hot. This alarm warns that a DEVICE OVERTEMP fault may be near. R1…R4 & R7/R8: 100 °C (212 °F) R5/R6: 110 °C (230 °F) Check for and correct: • Fan failure. • Obstructions in the air flow. • Dirt or dust coating on the heat sink. • Excessive ambient temperature. • Excessive motor load.
2010	MOT OVERTEMP	Motor is hot, based on either the drive's estimate or on temperature feedback. This alarm warns that a Motor Underload fault trip may be near. Check: • Check for overloaded motor. • Adjust the parameters used for the estimate (3005…3009). • Check the temperature sensors and Group 35 parameters.
2011	UNDERLOAD	Motor load is lower than expected. This alarm warns that a Motor Underload fault trip may be near. Check: • Motor and drive ratings match (motor is NOT undersized for the drive) • Settings on parameters 3013 to 3015
2012	MOTOR STALL	Motor is operating in the stall region. This alarm warns that a Motor Stall fault trip may be near.
2013 (note 1)	AUTORESET	This alarm warns that the drive is about to perform an automatic fault reset, which may start the motor. • To control automatic reset, use parameter group 31 AUTOMATIC RESET.
2014 (note 1)	AUTOCHANGE	This alarm warns that the PFA autochange function is active. • To control PFA, use parameter group 81 PFA CONTROL

Alarm Code	Display	Description
2015	PFA INTERLOCK	This alarm warns that the PFA interlocks are active, which means that the drive cannot start the following: • Any motor (when Autochange is used), • The speed regulated motor (when Autochange is not used).
2016	Reserved	
2017	OFF BUTTON	Note 1.
2018 (note 1)	PID SLEEP	This alarm warns that the PID sleep function is active, which means that the motor could accelerate when the PID sleep function ends. • To control PID sleep, use parameters 4022…4026 or 4122…4126.
2019	ID RUN	Performing ID run.
2020	RESERVED	
2021	START ENABLE 1 MISSING	This alarm warns that the Start Enable 1 signal is missing. • To control Start Enable 1 function, use parameter 1608. To correct, check: • Digital input configuration. • Communication settings.
2022	START ENABLE 2 MISSING	This alarm warns that the Start Enable 2 signal is missing. • To control Start Enable 2 function, use parameter 1609. To correct, check: • Digital input configuration. • Communication settings.
2023	EMERGENCY STOP	Emergency stop activated.
2024	ENCODER ERROR	The drive is not detecting a valid encoder signal. Check for and correct: • Encoder presence and proper connection (reverse wired, loose connection, or short circuit). • Voltage logic levels are outside of the specified range. • A working and properly connected Pulse Encoder Interface Module, OTAC-01. • Wrong value entered in parameter 5001 PULSE NR. A wrong value will only be detected if the error is such that the calculated slip is greater than 4 times the rated slip of the motor. • Encoder is not being used, but parameter 5002 ENCODER ENABLE = 1 (ENABLED).
2025	FIRST START	Signals that a the drive is performing a First Start evaluation of motor characteristics. This is normal the first time the motor is run after motor parameters are entered or changed. See parameter 9910 (MOTOR ID RUN) for a description of motor models.

Note 1. Even when the relay output is configured to indicate alarm conditions (e.g. parameter 1401 RELAY OUTPUT 1 = 5 (ALARM) or 16 (FLT/ALARM)), this alarm is not indicated by a relay output.

Maintenance

Warning! Read "Safety" on page 3 before performing any maintenance on the equipment. Ignoring the safety instructions can cause injury or death.

Maintenance Intervals

If installed in an appropriate environment, the drive requires very little maintenance. This table lists the routine maintenance intervals recommended by ABB.

Maintenance	Application	Interval	Instruction
Check/replace R7/R8 enclosure inlet air filter	R7/R8 UL type 12 enclosures	Check every 3 months. Replace as needed.	"Frame Sizes R7/R8 – UL type 12 Enclosure Inlet Air Filter" on page 258
Check/replace R7/R8 enclosure exhaust air filter.	R7/R8 UL type 12 enclosures	Check every 6 months. Replace as needed.	"Frame Sizes R7/R8 – UL type 12 Enclosure Exhaust Filters" on page 259
Check and clean heatsink.	All	Depends on the dustiness of the environment (every 6…12 months)	See "Heatsink" on page 254.
Replace drive module fan.	All	Every six years	See "Drive Module Fan Replacement" on page 255.
Replace drive module fan.	UL type 12 enclosures	Every three years.	See "Enclosure Fan Replacement – UL Type 12 Enclosures" on page 256.
Change capacitor.	Frame sizes R5 and R6	Every ten years	See "Capacitors" on page 261.
Replace battery in the Assistant control panel	All	Every ten years	See "Control Panel" on page 261.

Heatsink

The heatsink fins accumulate dust from the cooling air. Since a dusty heatsink is less efficient at cooling the drive, overtemperature faults become more likely. In a "normal" environment (not dusty, not clean) check the heatsink annually, in a dusty environment check more often.

Clean the heatsink as follows (when necessary):

1. Remove power from drive.
2. Remove the cooling fan (see section "Drive Module Fan Replacement" on page 255).
3. Blow clean compressed air (not humid) from bottom to top and simultaneously use a vacuum cleaner at the air outlet to trap the dust.

Note: If there is a risk of the dust entering adjoining equipment, perform the cleaning in another room.

4. Replace the cooling fan.
5. Restore power.

Drive Module Fan Replacement

The drive module fan cools the heatsink. Fan failure can be predicted by the increasing noise from fan bearings and the gradual rise in the heatsink temperature in spite of heatsink cleaning. If the drive is operated in a critical part of a process, fan replacement is recommended once these symptoms start appearing. Replacement fans are available from ABB. Do not use other than ABB specified spare parts.

To monitor the running time of the cooling fan, see "Group 29: Maintenance Trig" on page 105.

Frame Sizes R1...R4

To replace the fan:

1. Remove power from drive.
2. Remove drive cover.
3. For Frame Size:
   - R1, R2: Press together the retaining clips on the fan cover sides, and lift.
   - R3, R4: Press in on the lever located on the left side of the fan mount, and rotate the fan up and out.
4. Disconnect the fan cable.
5. Install the fan in reverse order.
6. Restore power.

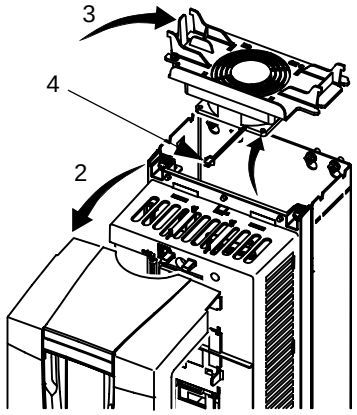

X0021

3.0 - Maintenance

3.1 - Motors
3.2 - Valves
    3.2.1 - Isolation Valves
    3.2.2 - Check Valves (81-12 / Hytrol 100)
    3.2.3 - Thermal Relief Valve
3.3 - Hydro-pneumatic Bladder Tank

BALDOR AC & DC Motor Installation & Maintenance

Safety Notice: Be sure to read and understand all of the Safety Notice statements in MN408 or Product Specific manual for your motor. A copy is available at: http://www.baldor.com/support/product_manuals.asp

ACCEPTANCE
Thoroughly inspect this equipment before accepting shipment from the transportation company. If any damage or shortage is discovered do not accept until noted on the freight bill. Report all damage to the freight carrier.

SAFETY
Eye bolts, lifting lugs or lifting openings, if provided, are intended only for lifting the motor and motor mounted standard accessories not exceeding, in total 30% of the motor weight. These lifting provisions should never be used when lifting or handling the motor and driven equipment. Eye bolt lifting capacity rating is based on a lifting alignment coincident with eye bolt center line. Eye bolt capacity reduces as deviation from this alignment is increased. Be sure eye bolts are tight and prevented from turning before lifting.

INSTALLATION OUTSIDE THE USA:
Refer to MN408 and MN1383 for Compliance with European Directives. Copies are available at:
http://www.baldor.com/support/product_manuals.asp

MOTOR ENCLOSURE
ODP, Open drip proof motors are intended for use in clean, dry locations with adequate supply of cooling air. These motors should not be used in the presence of flammable or combustible materials. Open motors can emit flame and/or molten metal in the event of insulation failure. TEFC, totally enclosed motors are intended for use where moisture, dirt and/or corrosive materials are present in indoor and outdoor locations.
Explosion protected motors, as indicated by a Nationally Recognized Testing Laboratory Certification mark and marking with Class, Division and Temperature Code are intended for installation in hazardous locations as described in Article 500 of the NEC. Refer to MN408 for more details.

MOUNTING
Foot mounted machines should be mounted to a rigid foundation to prevent excessive vibration. Shims may be used if location is uneven.

Flange mounted machines should be properly seated and aligned. Note: If improper rotation direction is detrimental to the load, check rotation direction prior to coupling the load to the motor shaft.
For V-belt drive, mount the sheave pulley close to the motor housing. Allow clearance for end to end movement of the motor shaft. Do not overtighten belts as this may cause premature bearing failure or shaft breakage.
Direct coupled machines should be carefully aligned and the shaft should rotate freely without binding.

GENERAL
The user must select a motor starter and overcurrent protection suitable for this motor and its application. Consult motor starter application data as well as the National Electric Code and/or applicable local codes. Special motors for use by United States Government including special specifications, master plans, etc. refer to the applicable master plans and specifications involved. On motors received from the factory with the shaft blocked, remove blocking before operating the motor. If motor is to be reshipped alone or installed to another piece of equipment, the shaft block must be installed to prevent axial movement and prevent brinelling of the bearings during shipment.

TESTING
If the motor has been in storage for an extensive period or has been subjected to adverse moisture conditions, check the motor insulation resistance with a meg ohm meter. Depending on storage conditions it may be necessary to regrease or change rusted bearings. Contact Baldor District Office if resistance is less than 5 meg ohms.

WARNING: Do not touch electrical connections before you first ensure that power has been disconnected. Electrical shock can cause serious or fatal injury.

WARNING: Be sure the system is properly grounded before applying power. Electrical shock can cause serious or fatal injury.

INSTALLATION
This motor must be installed in accordance with National Electric Code, NEMA MG-2, IEC standards or local codes.

WIRING
Connect the motor as shown in the connection diagrams. If this motor is installed as part of a motor control drive system, connect and protect the motor according to the control manufacturers diagrams. Refer to MN408 for additional details on lead marking. The wiring, fusing and grounding must comply with the National Electrical Code or IEC and local codes. When the motor is connected to the load for proper direction of rotation and started, it should start quickly and run smoothly. If not, stop the motor immediately and determine the cause. Possible causes are: low voltage at the motor, motor connections are not correct or the load is too heavy. Check the motor current after a few minutes of operation and compare the measured current with the nameplate rating.

GROUNDING
Ground the motor according to NEC and local codes. In the USA consult the National Electrical Code, Article 430 for information on grounding of motors and generators, and Article 250 for general information on grounding. In making the ground connection, the installer should make certain that there is a solid and permanent metallic connection between the ground point, the motor or generator terminal housing, and the motor or generator frame. In non-USA locations consult the appropriate national or local code applicable.

ADJUSTMENT
The neutral is adjustable on some DC motors. AC motors have no adjustable parts.

Noise
For specific sound power or pressure level information, contact your local Baldor representative.

VIBRATION
This motor is balanced to NEMA MG1, Part 7 standard.

BRUSHES (DC Motors)
Periodically, the brushes should be inspected and all brush dust blown out of the motor. If a brush is worn 1/2, (length specified in renewal parts data), replace the brushes.

WARNING: Guards must be installed for rotating parts such as couplings, pulleys, external fans, and unused shaft extensions, should be permanently guarded to prevent accidental contact by personnel. Accidental contact with body parts or clothing can cause serious or fatal injury.

Reassemble and seat the new brushes using a brush seating stone. Be sure the rocker arm is set on the neutral mark.

INSPECTION

Before connecting the motor to an electrical supply, inspect for any damage resulting from shipment. Turn the shaft by hand to ensure free rotation. Motor leads must be isolated before the shaft will turn freely on permanent magnet motors.

DRAIN PLUGS

One or more condensation drain plugs are provided on each endplate for various motor mounting configurations. For Washdown and totally enclosed, fan cooled or non-ventilated motors, the plugs in the lowest portion of the ends shields should be removed for operation (unless the motor has special stainless steel drains). All drains are located in the lowest portion of the ends shields.

MOUNTING

Mount the motor on a foundation sufficiently rigid to prevent excessive vibration. Grease lubricated ball bearing motors may be mounted with the feet at any angle. After careful alignment, bolt motor securely in place. Use shim to fill any unevenness in the foundation. Motor feet should sit solidly on the foundation before mounting bolts are tightened.

IP (Ingress Protection)

IP designations include two numerals, the first characteristic numeral is for ingress solid bodies and from dust. The second for ingress protection from liquid - water. Motors marked less than IP23 require additional protection from water.

GUARDING

After motor installation is complete, a guard of suitable dimensions must be constructed and installed around the motor/gearmotor. This guard must prevent personnel from coming in contact with any moving parts of the motor or drive assembly but must allow sufficient cooling air to pass over the motor. If a motor mounted brake is installed, provide proper safeguards for personnel in case of brake failure. Brush inspection plates and electrical connection cover plates or lids, must be installed before operating the motor.

STARTING

Before starting motor remove all unused shaft keys and loose rotating parts to prevent them from flying off. Check direction of rotation before coupling motor to load. The motor should start quickly and run smoothly and with little noise. If the motor should fail to start the load may be too great for the motor, the voltage is low or the motor has been miswired. In any case immediately shut motor off and investigate the cause.

ROTATION

To reverse the direction of rotation, disconnect and lockout power and interchange any two of the three AC power leads for three phase motors. For two-phase four wire, disconnect and lockout power and interchange the AC line leads on any one phase. For two phase three wire, disconnect and lockout power and interchange phase one and phase two AC line leads.

Maintenance Procedures

WARNING: Do not touch electrical connections before you first ensure that power has been disconnected. Electrical shock can cause serious or fatal injury.

WARNING: Surface temperatures of motor enclosures may reach temperatures which can cause discomfort or injury to personnel accidentally coming into contact with hot surfaces. Protection should be provided by the user to protect against accidental contact with hot surfaces. Failure to observe this precaution could result in bodily injury.

Lubrication Information

Refer to motor nameplate for recommended lubricant. If none is shown, the recommended lubricant for anti-friction bearings (-15°F to 120°) is POLYREX EM. For Min Start Temp -100°F use AEROSHELL #7. For roller bearings is ExxonMobil SHC-220.

Relubrication Intervals
(For motors with regrease capability)

New motors that have been stored for a year or more should be relubricated. Lubrication is also recommended at Table 1 intervals.

LUBRICATION INSTRUCTIONS

Cleanliness is important in lubrication. Any grease used to lubricate anti friction bearings should be fresh and free from contamination. Properly clean the grease inlet area of the motor to prevent grease contamination.

1. Select service conditions from Table 2.
2. Select lubrication interval (Table 1).
3. Adjust lubrication interval with multiplier from Table 3.
4. Select volume of grease from Table 4.

LUBRICATION PROCEDURE

Bearings should be lubricated while stationary and the motor is warm.

1. Locate the grease inlet, clean the area, and replace the pipe plug with a grease fitting.
2. Locate and remove the grease drain plug, if provided.
3. Add the recommended volume of recommended grease or add grease until clean grease appears at the grease drain, at the grease relief, or along the shaft opening.
4. Replace the grease inlet plug and run the motor for 15 minutes.
5. Replace the grease drain plug.

SPECIAL APPLICATIONS

For special temperature applications, consult your Baldor District Office.

Relubrication Intervals

Recommended relubrication intervals are shown in Table 1. It is important to realize that the recommended intervals of Table 2 are based on

average use. Refer to additional information contained in Tables 2, 3 and 4.

Table1 Relubrication Interval

NEMA (IEC) Frame Size	Rated Speed (RPM)			
	3600	1800	1200	900
Up to 210 incl. (132)	5500Hrs.	12000Hrs.	18000Hrs.	22000Hrs.
Over 210 to 280 incl. (180)	3600Hrs.	9500Hrs.	15000Hrs.	18000Hrs.
Over 280 to 360 incl. (225)	2200Hrs.	7400Hrs.	12000Hrs.	15000Hrs.
Over 360 to 5800 incl. (400)	2200Hrs.	3500Hrs.	7400Hrs.	10500Hrs.

* Relubrication intervals are for ball bearings.
For vertically mounted motors and roller bearings, divide the relubrication interval by 2.

** For motors operating at speeds greater than 3600 RPM, contact Baldor for relubrication recommendations.

Table2 Service Conditions

Severity of Service	Hours per day of Operation	Ambient Temperature Maximum	Atmospheric Contamination
Standard	8	40° C	Clean, Little Corrosion
Severe	16 Plus	50° C	Moderate dirt, Corrosion
Extreme	16 Plus	>50° C* or Class H Insulation	Severe dirt, Abrasive dust, Corrosion, Heavy Shock or Vibration
Low Temperature		<-29 ° C **	

* Special high temperature grease is recommended (Dow Corning DC44).

** Special low temperature grease is recommended (Aeroshell 7).

Note: Different grease types are generally incompatible and should not be mixed. Mixing different types can cause lubricant and bearing failure. Thoroughly clean bearing and cavity before changing grease type.

Table3 Lubrication Interval Multiplier

Severity of Service	Multiplier
Standard	1.0
Severe	0.5
Extreme	0.1
Low Temperature	1.0

Some motor designs use different bearings on each motor end. This is normally indicated on the motor nameplate. In this case, the larger bearing is installed on the motor Drive endplate. For best relubrication results, only use the appropriate amount of grease for each bearing size (not the same for both).

Table4 Amount of Grease to Add

Frame Size NEMA (IEC)	Bearing Description (These are the "Large" bearings (Shaft End) in each frame size)			
	Bearing	Weight of Grease to add * oz (Grams)	Volume of grease to be added	
			in^3	teaspoon
56 to 140 (90)	6203	0.08 (2.4)	0.15	0.5
140 (90)	6205	0.15 (3.9)	0.2	0.8
180 (100–112)	6206	0.19 (5.0)	0.3	1.0
210 (132)	6307	0.30 (8.4)	0.6	2.0
250 (160)	6309	0.47 (12.5)	0.7	2.5
280 (180)	6311	0.61 (17)	1.2	3.9
320 (200)	6312	0.76 (20.1)	1.2	4.0
360 (225)	6313	0.81 (23)	1.5	5.2
400 (250)	6316	1.25 (33)	2.0	6.6
440 (280)	6318	1.52(40)	2.5	8.2
440 (280)	6319	2.12 (60)	4.1	13.4
5000 to 5800 (315–400)	6328	4.70 (130)	9.2	30.0
5000 to 5800 (315–400)	NU328	4.70 (130)	9.2	30.0
360 to 449 (225–280)	NU319	2.12 (60)	4.1	13.4
AC Induction Servo				
76 Frame 180 (112)	6207	0.22 (6.1)	0.44	1.4
77 Frame 210 (132)	6210	0.32 (9.0)	0.64	2.1
80 Frame 250(160)	6213	0.49 (14.0)	0.99	3.3

Typical IEC vs NEMA Lead Marking

Single Phase Non-Reversible
Refer to the connection diagram provided on the Baldor motor.

Single Phase Reversible

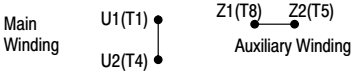

Dual Voltage Reversible

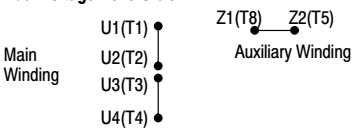

Three Phase
For single winding 3 phase motors, lead markings can be directly translated between IEC and NEMA designations.
For these motors, the lead markings are:

U1=T1	U2=T4	U3=T7	U4=T10
V1=T2	V2=T5	V3=T8	V4=T11
W1=T3	W2=T6	W3=T9	W4=T12

Refer to the connection diagram provided on the Baldor motor.
Some examples are as follows:

Three Leads

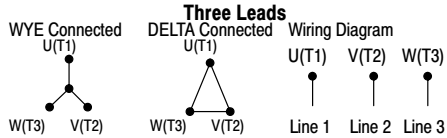

Six Leads

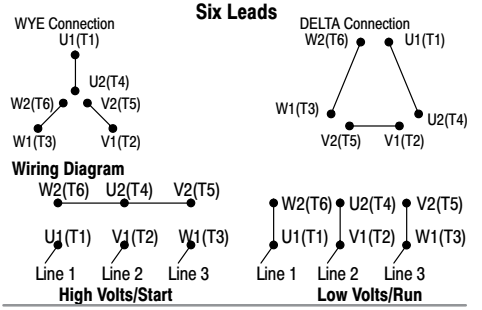

DC Motors
Lead markings can be translated between IEC and NEMA designations as follows:

	NEMA	IEC
Armature	A1, A2	A1, A2
Series Field	S1, S2	D1, D2
Shunt Field	F1, F2	E1, E2

Refer to the connection diagram provided on the Baldor motor.

416-1013

BALDOR®
A MEMBER OF THE ABB GROUP

P.O. Box 2400 Fort Smith, AR 72902-2400 USA Ph: (1) 479.646.4711, Fax: (1) 479.648.5792
www.baldor.com

© 2009, 2013 Baldor Electric Company
All rights reserved. Printed in USA
MN416
10/13

SERIES 31H

2"-20" (50mm-500mm)

Series 31H Lug valves are drilled and tapped to meet ASME Class 125/150 and PN16 flanges. Series 31H Valves will not be automated.

PRESSURE RATINGS	
BIDIRECTIONAL BUBBLE-TIGHT SHUT OFF & DEAD-END SERVICE	
2-20" (50-500mm)	250 psi (17.2 Bar)
BODY: 250 psi (17.2 Bar) CWP	

VELOCITY LIMITS For On/Off Services:	
Fluids 30 ft/sec (9 m/s)	**Gases** 175 ft/sec (54 m/s)

STANDARD MATERIALS SELECTION 31H	
Body	Cast Iron Ductile Iron
Disc	Aluminum Bronze Nylon 11 Coated Ductile Iron 316 Stainless Steel
Stem	416 Stainless Steel
Seat	Bonded EPDM Bonded BUNA-N

Material availability depends on valve size & series. Other materials are available. Please consult your local Bray representative for your specific application.

STANDARD MATERIALS SELECTION S30/31	
NAME	**MATERIAL**
Body	Cast Iron Ductile Iron Carbon Steel Aluminum
Disc	Aluminum Bronze Coated Ductile Iron Nylon 11 Coated Ductile Iron Halar® Coated Ductile Iron 304 Stainless Steel 316 Stainless Steel Duplex Stainless Steel Super Duplex Stainless Steel Hastelloy®
Stem	416 Stainless Steel 304 Stainless Steel 316 Stainless Steel Monel K500
Seat	BUNA-N – Food Grade EPDM – Food Grade FKM* White BUNA-N – Food Grade Bonded EPDM Bonded BUNA-N

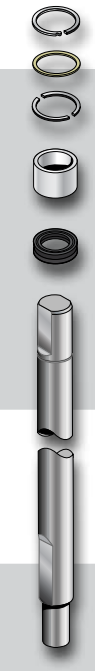

Material availability depends on valve size & series. Other materials are available. Please consult your local Bray representative for your specific application.

*FKM is the ASTM D1418 designation for Fluorinated Hydrocarbon Elastomers (also called Fluoroelastomers).
Hastelloy® is a registered trademark of Haynes International, Inc.
Halar® is a registered trademark of Ausimont U.S.A., Inc.

Bray CONTROLS

OPERATION AND MAINTENANCE MANUAL

RESILIENT SEATED BUTTERFLY VALVES

20/21, 22/23, 30/31, 3A/3AH, 31H, 31U, 32/33, 35/36, 36H

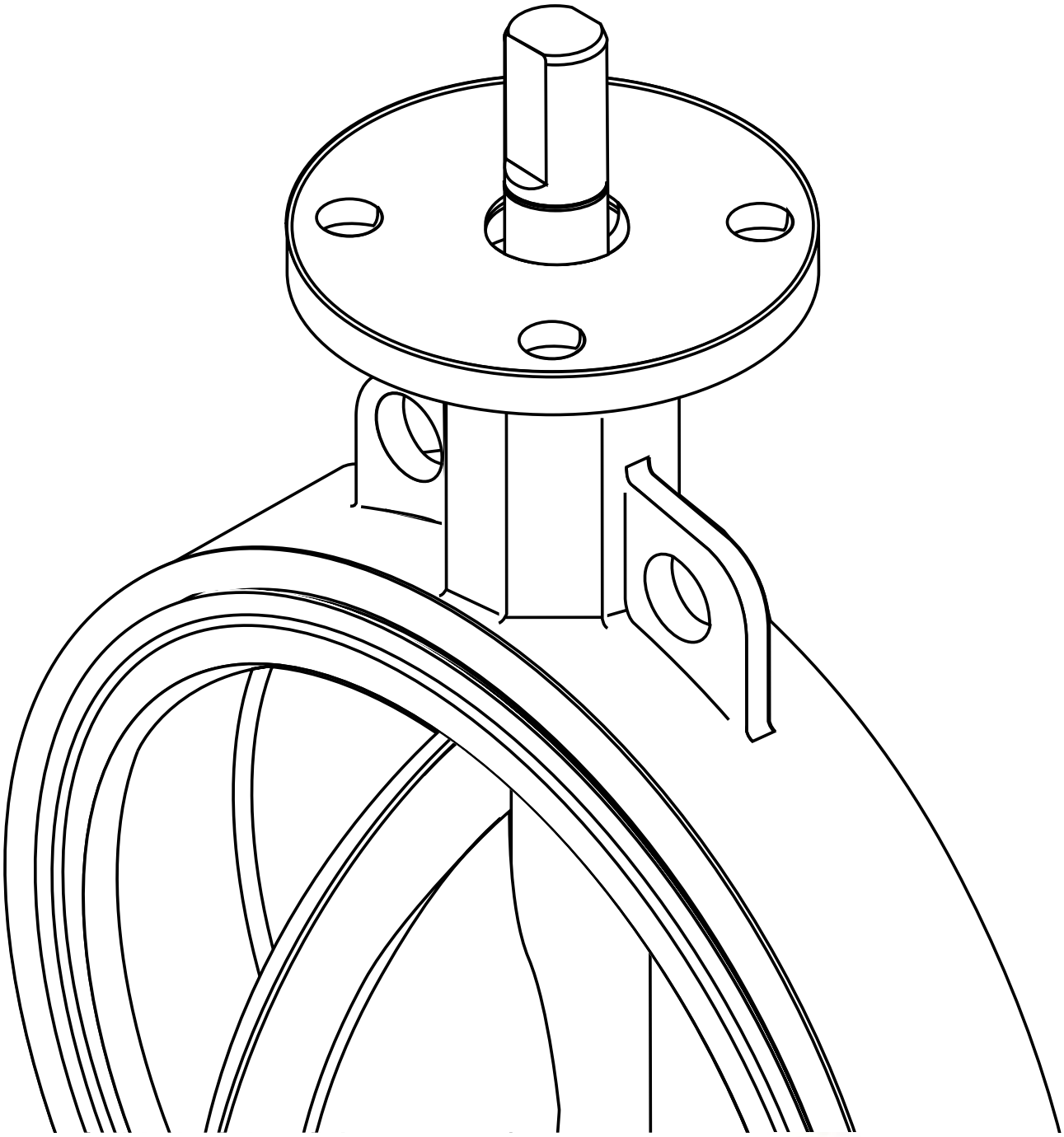

FOUNDED 1862

The High Performance Company

Safety Instructions - Definition of Terms

READ AND FOLLOW THESE INSTRUCTIONS
SAVE THESE INSTRUCTIONS

WARNING	indicates a potentially hazardous situation which, if not avoided, **could** result in death or serious injury.
CAUTION	indicates a potentially hazardous situation which, if not avoided, may result in minor or moderate injury.
NOTICE	used without the safety alert symbol indicates a potential situation which, if not avoided, may result in an undesirable result or state, including property damage.

Introduction

Historical Experience

Based on over twenty years experience in the butterfly industry, Bray can state without question the majority of all field problems for resilient seated butterfly valves are directly related to poor installation procedures. For this reason, it is very important all distributor salespeople educate their customers regarding proper installation of resilient seated butterfly valves.

Butterfly Valve Seat / Disc Function

Before reviewing the proper installation, maintenance, and repair procedures for resilient seated butterfly valves, let's discuss the seat-disc function of a butterfly valve. The seat in a resilient seated butterfly valve has molded o-rings on its flange face. **As a result, no gaskets are required as these o-rings serve the function of a gasket.** The flange face and molded o-rings of the seat extend beyond the body face-to-face to ensure sealing at the flange faces. The seat material, which extends past the face is compressed in installation and flows toward the center of the valve seat I.D.

In essence, the elastomer seat acts as a liquid, and the displaced elastomer moves toward the point of least resistance. The seat I.D. of all resilient seated butterfly valves is smaller than the disc O.D. This difference, the disc-seat interference, plus the increased interference due to the elastomer movement toward the seat center after installation, has been engineered so as to be the basis for pressure rating capability and the related seating/unseating torques. **Any change in this interference due to improper installation directly affects the pressure rating and seating/unseating torques.**

Finally, unlike many valve types, the resilient seated butterfly valve's disc actually extends beyond the face of the valve body at given angles of opening (say, 30° or more) when installed between flanges.

CAUTION

It is very important before installation to ensure the critical chord dimension of the disc at the full open position is less than the adjacent pipe flange I.D.

Shipment & Storage

A. The seat, disc, stem and bushing of the resilient seated butterfly valve should be coated with silicone lubricant unless specified otherwise as recommended by Bray Technical Bulletin 1028.

B. The disc should be positioned at 10° open. **Note**: See page 2 for special considerations for valves with spring return actuators.

C. Valves should be stored indoors with a preferred temperature range from 40° F (4°C) to 85° F (29°C).

D. When valves are stored for a long time, open and close the valves once every 3 months.

E. Ship and store valves so that no heavy loads are applied to the bodies.

Installation Considerations – Piping and Valve Orientation and Placement

Piping and Flanged Compatibilities

Piping

These valves have been engineered so that the critical disc chord dimension at the full open position will clear the adjacent inside diameter of most types of piping, including Schedule 40, lined pipe, heavy wall, etc.

Metal Flanges

Resilient seated butterfly valves have been designed to be suitable for all types of flanges (ASME, DIN, JIS and other international flange standards), whether flat-faced, raised face, slip-on, weld-neck, etc. Proper alignment of any butterfly valve between flanges is critical to good performance of the valve. The flange bolts must also be evenly tightened around the circumference of the valve, providing consistent flange compression of the molded o-ring in the seat face.

Since Bray does not recommend the use of gaskets between flanges on resilient seated butterfly valves, a uniform flange face is critical to proper valve sealing. Most weld-neck and slip-on flanges conforming to ASME specifications have an appropriate flange face. Types A and B butt-weld stub-end flanges also provide a suitable mating surface for the molded o-ring.

It should be noted that Type C butt-weld stub-end flanges have an "as formed" flange face. The varying surface of this flange face can create sealing problems between any resilient-seated butterfly valve and the flange face. For this reason, Type C flanges are not recommended for use with resilient-seating butterfly valves.

Non-Metallic Flanges

When non-metallic flanges, such as plastic or PVC, are used with resilient seated butterfly valves, care must be taken not to over-tighten the flange bolts. The inherent flexibility of these non-metallic flange materials allow them to be over-tightened relatively easily. Flexing caused by this over-tightening can actually reduce the compression of the valve between the flanges, causing leaks between the valve and the flange face. Proper alignment and firm, even, but not excessive tightening of flange bolts are especially important with non-metallic flanges. In some cases, non-metallic flanges of low quality will not mate tightly with butterfly valves regardless of the care taken during installation.

Valves with Spring Return Actuators

1. Fail Closed Assemblies

If the valve is supplied with an actuator, the butterfly valve is shipped in the full closed position (as no air pressure is present to compress the springs and open the disc).

CAUTION

Installing the valve with the disc in the full closed position may create a compression set on the seat causing higher than expected torques or premature seat failure. It is recommended to:

- Remove the actuator. Be sure to scribe the valve and actuator to ensure the re-installed actuator is in the exact same quadrant as originally configured
- Install the valve per the attached installation tag instructions
- Re-install the actuator ensuring it is in the proper quadrant

2. Fail Open Assemblies

If the valve is supplied with an actuator, the butterfly valve disc is shipped in the full open position (as no air pressure is present to compress the springs and close the valve disc.) The sealing surface, or disc edge, is therefore exposed. Damage to that surface will cause premature seat failure.

CAUTION

Use caution installing the valve being careful not to damage the disc edge. It is recommended to:

- Remove the actuator. Be sure to scribe the valve and actuator to ensure the re-installed actuator is in the exact same quadrant as originally configured
- Install the valve per the attached installation tag instructions
- Re-install the actuator ensuring it is in the proper quadrant

3. Valve Location

a. Resilient seated butterfly valves should be installed if possible a minimum of 6 pipe diameters from other line elements, i.e., elbows, pumps, valves, etc. of course, 6 pipe diameters are not always practical, but it is important to achieve as much distance as possible.

b. Where the resilient seated butterfly valve is connected to a check valve or pump, use an expansion joint between them to ensure the disc does not interfere with the adjacent equipment.

4. Valve Orientation

a. In general, Bray recommends the resilient seated valve be installed with the stem in the vertical position and the actuator mounted vertically directly above the valve; however, there are those applications as discussed below where the stem should be horizontal. **NOTE:** Bray does not recommend valves be installed in an upside-down position.

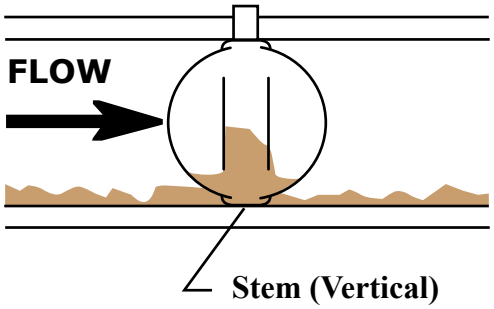

INCORRECT INSTALLATION

Sludge builds up on disc

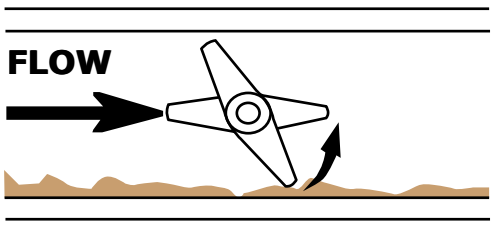

Stem (Horizontal)

CORRECT INSTALLATION

Sludge passes under disc

b. For slurries, sludge, mine tailing, pulp stock, dry cement, and any media with sediment or particles, Bray recommends the resilient seated valve be installed with the stem in the horizontal position with the lower disc edge opening in the downstream direction.

CLA-VAL™

MODEL 81-12

Check Valve

- **Simple Proven Design**
- **No-Slam Operation**
- **Drip-Tight Shut-Off**
- **Recommended for Variable Speed Pumps**
- **No Packing Glands or Stuffing Boxes**
- **Easy to Install & Maintain**

The Cla-Val Model 81-12 Check Valve is a hydraulically operated No-Slam Check Valve. This valve opens when the pressure at the inlet exceeds the discharge psudden opening surges. When a pressure reversal occurs the higher downstream pressure is applied to the cover chamber through the control tube lines, and the valve closes drip tight.

This valve is ideally suited for use where a positive shutoff is required. The rubber disc assures tight sealing even if the fluid contains grit or other small-size particles. The simple packless design insures reliable operation and freedom from leaks.

Schematic Diagram

Item	Description
1	Hytrol (Main Valve)

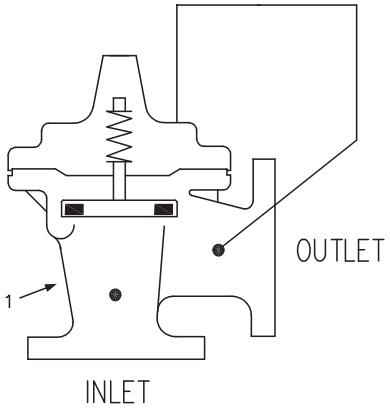

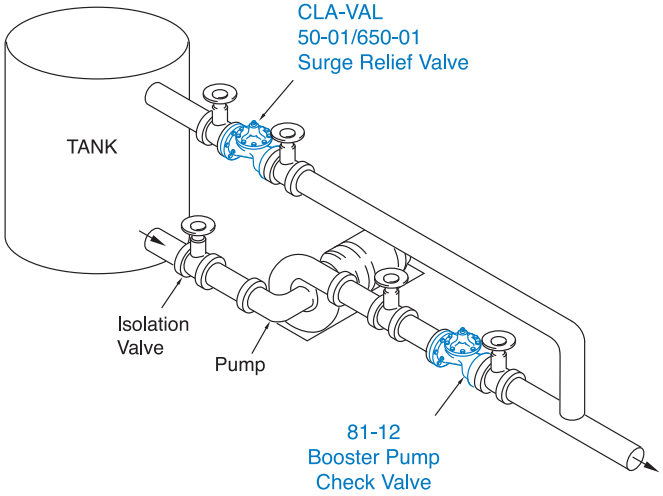

Typical Applications

Install on the discharge of booster pumps to prevent return flow when pump is off. Relief valve as shown is good practice to minimize surges when pump stops.

For valve sizes larger than 4", use Model 81-02.

CLA-VAL™

81-12 Valve Selection	100-01 Pattern: Globe (G), Angle (A), End Connections: Threaded (T), Grooved (GR), Flanged (F) Indicate Available Sizes							
	Inches	1	1¼	1½	2	2½	3	4
	mm	25	32	40	50	65	80	100
Basic Valve 100-01	Pattern	G, A	G, A	G, A	G, A	G, A	G, A	G, A
	End Detail	T	T	T, F, GR	T, F, GR	T, F, GR*	T, F, GR	T, F, GR
Suggested Flow (gpm)	Maximum	55	93	125	210	300	460	240
Suggested Flow (Liters/Sec)	Maximum	3.5	6	8	13	19	29	15.1

100-01 Series is the full internal port Hytrol. *Globe Grooved Only

Pilot System Specifications

Temperature Rating

Water: to 180°F. Max.

Speed Controls

For valves with opening and closing speed controls order Model 81-02

Materials

Standard Pilot System Materials

Fittings: Brass
Tubing: Copper

Optional Pilot System Materials

Pilot Systems are available with optional stainless steel or Monel materials.

When ordering please specify:

1. Catalog No. 81-12
2. Valve Size
3. Pattern: Globe or Angle
4. Pressure Class
5. Threaded or Flanged
6. Desired Options
7. When Vertically Installed

Model 81-01 Dimensions (In Inches)

Valve Size (Inches)	1	1¼	1½	2	2½	3	4
A Threaded	7.25	7.25	7.25	9.38	11.00	12.50	—
AA 150 ANSI	—	—	8.50	9.38	11.00	12.00	15.00
AAA 300 ANSI	—	—	9.00	10.00	11.62	13.25	15.62
AAAA Grooved End	—	—	8.50	9.00	11.00	12.50	15.00
B Dia.	5.62	5.62	5.62	6.62	8.00	9.12	11.50
C Max.	5.50	5.50	5.50	6.50	7.56	8.19	10.62
CC Max. Grooved End	—	—	4.75	5.75	6.88	7.25	9.31
D Threaded	3.25	3.25	3.25	4.75	5.50	6.00	—
DD 150 ANSI	—	—	4.00	4.75	5.50	6.00	7.50
DDD 300 ANSI	—	—	4.25	5.00	5.88	6.38	7.88
DDDD Grooved End	—	—	—	4.75	—	6.00	7.50
E	1.12	1.12	1.12	1.50	2.69	2.06	3.19
EE Grooved End	—	—	2.00	2.50	2.88	3.12	4.25
F 150 ANSI	—	—	2.50	3.00	3.50	3.75	4.50
FF 300 ANSI	—	—	3.06	3.25	3.75	4.13	5.00
G Threaded	1.88	1.88	1.88	3.25	4.00	4.50	—
GG 150 ANSI	—	—	4.00	3.25	4.00	4.00	5.00
GGG 300 ANSI	—	—	4.25	3.50	4.31	4.38	5.31
GGGG Grooved End	—	—	—	3.25	—	4.25	5.00
H NPT Body Tapping	0.375	0.375	0.375	0.375	0.50	0.50	0.75
J NPT Cover Center Plug	0.25	0.25	0.25	0.50	0.50	0.50	0.75
K NPT Cover Tapping	0.375	0.375	0.375	0.375	0.50	0.50	0.75
Stem Travel	0.40	0.40	0.40	0.60	0.70	0.80	1.10
Approx. Ship Wt. Lbs.	15.00	15.00	15.00	35.00	50.00	70.00	140.00
X Pilot System	11.00	11.00	11.00	13.00	14.00	15.00	17.00
Y Pilot System	9.00	9.00	9.00	9.00	10.00	11.00	12.00
Z Pilot System	9.00	9.00	9.00	9.00	10.00	11.00	12.00

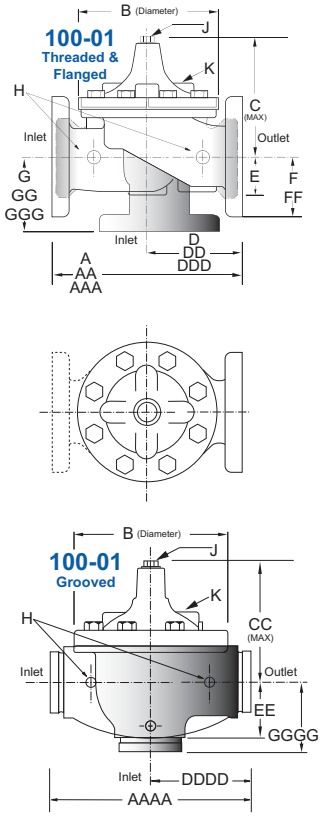

Pressure Ratings (Recommended Maximum Pressure - psi)

Valve Body & Cover		Pressure Class			
		Flanged			Threaded
Grade	Material	ANSI Standards*	150 Class	300 Class	300 Class
ASTM A536	Ductile Iron	B16.42	250	400	400
ASTM A216-WCB	Cast Steel	B16.5	285	400	400
ASTM B62	Bronze	B16.24	225	400	400

Note: * ANSI standards are for flange dimensions only.
Flanged valves are available faced but not drilled.
‡ End Details machined to ANSI B2.1 specifications.
Valves for higher pressure are available; consult factory for details

Materials

Component	Standard Material Combinations		
Body & Cover	Ductile Iron	Cast Steel	Bronze
Available Sizes	1" - 4"	1" - 4"	1" - 4"
Disc Retainer & Diaphragm Washer	Cast Iron	Cast Steel	Bronze
Trim: Disc Guide, Seat & Cover Bearing	Bronze is Standard Stainless Steel is Optional		
Disc	Buna-N® Rubber		
Diaphragm	Nylon Reinforced Buna-N® Rubber		
Stem, Nut & Spring	Stainless Steel		

For material options not listed, consult factory.
Cla-Val manufactures valves in more than 50 different alloys.

CLA-VAL P.O. Box 1325 • Newport Beach, CA 92659-0325 • Phone: 949-722-4800 • Fax: 949-548-5441 • E-mail: claval@cla-val.com • Website cla-val.com
©Copyright Cla-Val 2013 Printed in USA Specifications subject to change without notice.

CLA-VAL

—MODEL— 100-01 Hytrol Valve

Description

The Cla-Val Model 100-01 Hytrol Valve is a main valve for Cla-Val Automatic Control Valves. It is a hydraulically operated, diaphragm-actuated, globe or angle pattern valve.

This valve consists of three major components; body, diaphragm assembly, and cover. The diaphragm assembly is the only moving part. The diaphragm assembly uses a diaphragm of nylon fabric bonded with synthetic rubber. A synthetic rubber disc, contained on three and one half sides by a disc retainer and disc guide, forms a seal with the valve seat when pressure is applied above the diaphragm. The diaphragm assembly forms a sealed chamber in the upper portion of the valve, separating operating pressure from line pressure.

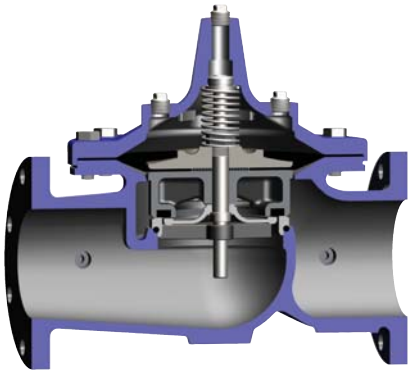

Installation

1. Before valve is installed, pipe lines should be flushed of all chips, scale and foreign matter.
2. It is recommended that either gate or block valves be installed on both ends of the 100-01 Hytrol Valve to facilitate isolating the valve for preventive maintenance and repairs.
3. Place the valve in the line with flow through the valve in the direction indicated on the inlet nameplate. (See “Flow Direction” Section) **Note: Valve can be installed in the vertical or horizontal position.**
4. Allow sufficient room around valve to make adjustments and for disassembly.
5. Cla-Val 100-01 Hytrol Valves operate with maximum efficiency when mounted in horizontal piping with the cover UP, however, other positions are acceptable. Due to size and weight of the cover and internal components of 8 inch and larger valves, installation with the cover UP is advisable. This makes internal parts readily accessible for periodic inspection.
6. Caution must be taken in the installation of this valve to insure that galvanic and/or electrolytic action does not take place. The proper use of dielectric fittings and gaskets are required in all systems using dissimilar metals.
7. If a pilot control system is installed on the 100-01 Hytrol Valve, use care to prevent damage. If it is necessary to remove fittings or components, be sure they are kept clean and replaced exactly as they were.
8. After the valve is installed and the system is first pressurized, vent air from the cover chamber and pilot system tubing by loosening fittings at all high points.

Principles of Operation

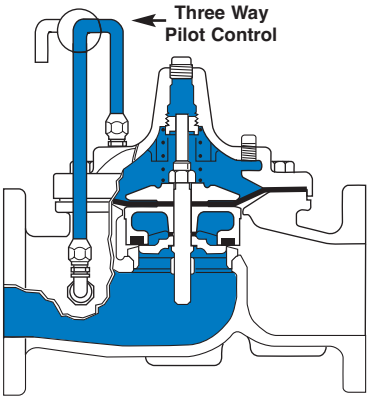

Tight Closing Operation

When pressure from the valve inlet (or an equivalent independent operating pressure) is applied to the diaphragm chamber the valve closes drip-tight.

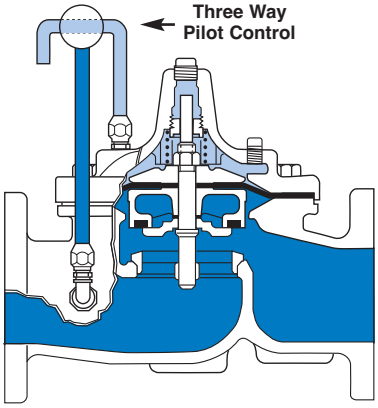

Full Open Operation

When pressure in diaphragm chamber is relieved to a zone of lower pressure (usually atmosphere) the line pressure (5 psi Min.) at the valve inlet opens the valve.

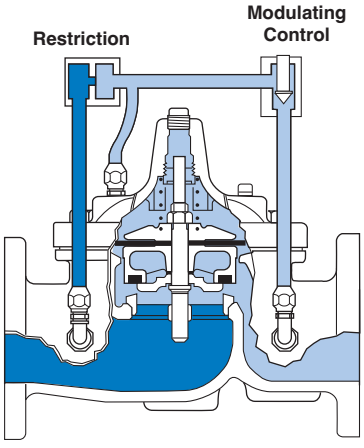

Modulating Action

Valve modulates when diaphragm pressure is held at an intermediate point between inlet and discharge pressure. With the use of a Cla-Val. "modulating control," which reacts to line pressure changes, the pressure above the diaphragm is varied, allowing the valve to throttle and compensate for the change.

Flow Direction

The flow through the 100-01 Hytrol Valve can be in one of two directions. When flow is “up-and-over the seat,” it is in “normal” flow and the valve will fail in the open position. When flow is “over-the seat-and down,” it is in “reverse” flow and the valve will fail in the closed position. There are no permanent flow arrow markings. **The valve must be installed according to nameplate data.**

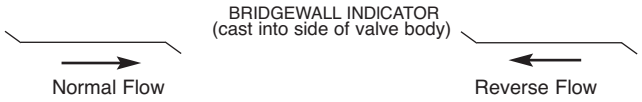

Recommended Tools

1. Three pressure gauges with ranges suitable to the installation to be put at Hytrol inlet, outlet and cover connections.

2. Cla-Val Model X101 Valve Position Indicator. This provides visual indication of valve position without disassembly of valve.

3. Other items are: suitable hand tools such as screwdrivers, wrenches, etc. soft jawed (brass or aluminum) vise, 400 grit wet or dry sandpaper and water for cleaning.

Troubleshooting

The following troubleshooting information deals strictly with the Model 100-01 Hytrol Valve. This assumes that all other components of the pilot control system have been checked out and are in proper working condition. (See appropriate sections in Technical Manual for complete valve).

All trouble shooting is possible without removing the valve from the line or removing the cover. It is highly recommended to permanently install a Model X101 Valve Position Indicator and three gauges in unused Hytrol inlet, outlet and cover connections.

SYMPTOM	PROBABLE CAUSE	REMEDY
Fails to Close	Closed isolation valves in control system, or in main line.	Open Isolation valves.
	Lack of cover chamber pressure.	Check upstream pressure, pilot system, strainer, tubing, valves, or needle valves for obstruction.
	Diaphragm damaged. (See Diaphragm Check.)	Replace diaphragm.
	Diaphragm assembly inoperative. Corrosion or excessive scale build up on valve stem. (See Freedom of Movement Check)	Clean and polish stem. Inspect and replace any damaged or badly eroded part.
	Mechanical obstruction. Object lodged in valve. (See Freedom of Movement Check)	Remove obstruction.
	Worn disc. (See Tight Sealing Check)	Replace disc.
	Badly scored seat. (See Tight Sealing Check)	Replace seat.
Fails to Open	Closed upstream and/or downstream isolation valves in main line.	Open isolation valves.
	Insufficient line pressure.	Check upstream pressure. (Minimum 5 psi flowing line pressure differential.)
	Diaphragm assembly inoperative. Corrosion or excessive buildup on valve stem. (See Freedom of Movement Check)	Clean and polish stem. Inspect and replace any damaged or badly eroded part.
	Diaphragm damaged. (For valves in "reverse flow" only)	Replace diaphragm.

After checking out probable causes and remedies, the following three checks can be used to diagnose the nature of the problem before maintenance is started. They must be done in the order shown.

Three Checks

The 100-01 Hytrol Valve has only one moving part (the diaphragm and disc assembly). So, there are only three major types of problems to be considered.

First: Valve is stuck - that is, the diaphragm assembly is not free to move through a full stroke either from open to close or vice versa.

Second: Valve is free to move and can’t close because of a worn out diaphragm.

Third: Valve leaks even though it is free to move and the diaphragm isn’t leaking.

***CAUTION**:*
*Care should be taken when doing the troubleshooting checks on the 100-01 Hytrol Valve. These checks do require the valve to open fully. This will either allow a high flow rate through the valve, or the downstream pressure will quickly increase to the inlet pressure. In some cases, this can be very harmful. Where this is the case, and there are no block valves in the system to protect the downstream piping, it should be realized that **the valve cannot be serviced under pressure.** Steps should be taken to remedy this situation before proceeding any further.*

Diaphragm Check (#1)

1. Shut off pressure to the Hytrol Valve by slowly closing upstream and downstream isolation valves. **SEE CAUTION**.

2. Disconnect or close all pilot control lines to the valve cover and leave only one fitting in highest point of cover open to atmosphere.

3.With the cover vented to atmosphere, slowly open upstream isolation valve to allow some pressure into the Hytrol Valve body. Observe the open cover tapping for signs of continuous flow. It is not necessary to fully open isolating valve. Volume in cover chamber capacity chart will be displaced as valve moves to open position. Allow sufficient time for diaphragm assembly to shift positions. If there is no continuous flow, you can be quite certain the diaphragm is sound and the diaphragm assembly is tight. If the fluid appears to flow continuously this is a good reason to believe the diaphragm is either damaged or it is loose on the stem. In either case, this is sufficient cause to remove the valve cover and investigate the leakage. (See "Maintenance" Section for procedure.)

COVER CHAMBER CAPACITY
(Liquid Volume displaced when valve opens)

Valve size (inches)	Displacement	
	Gallons	Liters
1 1/4	.020	.07
1 1/2	.020	.07
2	.032	.12
2 1/2	.043	.16
3	.080	.30
4	.169	.64
6	.531	2.0
8	1.26	4.8
10	2.51	9.5
12	4.00	15.1
14	6.50	24.6
16	9.57	36.2
20	12.00	45.4
24	29.00	109.8
30	42.00	197.0
36	90.00	340.0

Freedom of Movement Check (#2)

4. Determining the Hytrol Valve's freedom of movement can be done by one of two methods.

5. For most valves it can be done after completing Diaphragm Check (Steps 1, 2, and 3). **SEE CAUTION**. At the end of step 3 the valve should be fully open.

6. If the valve has a Cla-Val X101 Position Indicator, observe the indicator to see that the valve opens wide. Mark the point of maximum opening.

7. Re-connect enough of the control system to permit the application of inlet pressure to the cover. Open pilot system cock so pressure flows from the inlet into the cover.

8. While pressure is building up in the cover, the valve should close smoothly. There is a hesitation in every Hytrol Valve closure, which can be mistaken for a mechanical bind. The stem will appear to stop moving very briefly before going to the closed position. This slight pause is caused by the diaphragm flexing at a particular point in the valve's travel and is not caused by a mechanical bind.

9. When closed, a mark should be made on the X101 Valve position indicator corresponding to the "closed" position. The distance between the two marks should be approximately the stem travel shown in chart.

STEM TRAVEL
(Fully Open to Fully Closed)

Valve Size (inches)		Travel (inches)	
Inches	MM	Inches	MM
1 1/4	32	0.4	10
1 1/2	40	0.4	10
2	50	0.6	15
2 1/2	65	0.7	18
3	80	0.8	20
4	100	1.1	28
6	150	1.7	43
8	200	2.3	58
10	250	2.8	71
12	300	3.4	86
14	350	4.0	100
16	400	4.5	114
20	500	5.6	143
24	600	6.7	165
30	800	7.5	190
36	900	8.5	216

10. If the stroke is different than that shown in stem travel chart this is a good reason to believe something is mechanically restricting the stroke of the valve at one end of its travel. If the flow does not stop through the valve when in the indicated "closed" position, the obstruction probably is between the disc and the seat. If the flow does stop, then the obstruction is more likely in the cover. In either case, the cover must be removed, and the obstruction located and removed. The stem should also be checked for scale build-up. (See "Maintenance, section for procedure.)

11. For valves 6" and smaller, the Hytrol Valve's freedom of movement check can also be done after all pressure is removed from the valve. **SEE CAUTION**. After closing inlet and outlet isolation valves and bleeding pressure from the valve, check that the cover chamber and the body are temporarily vented to atmosphere. Insert fabricated tool into threaded hole in top of valve stem, and lift the diaphragm assembly manually. Note any roughness. The diaphragm assembly should move smoothly throughout entire valve stroke. The tool is fabricated from rod that is threaded on one end to fit valve stem and has a "T" bar handle of some kind on the other end for easy gripping. (See chart in Step 4 of "Disassembly" Section.)

12. Place marks on this diaphragm assembly lifting tool when the valve is closed and when manually positioned open. The distance between the two marks should be approximately the stem travel shown in stem travel chart. If the stroke is different than that shown, there is a good reason to believe something is mechanically restricting the stroke of the valve. The cover must be removed, and the obstruction located and removed. The stem should also be checked for scale build-up. (See "Maintenance" Section for procedure.)

Tight Sealing Check (#3)

13. Test for seat leakage after completing checks #1 & #2 (Steps 1 to 12). **SEE CAUTION.** Close the isolation valve downstream of the Hytrol Valve. Apply inlet pressure to the cover of the valve, wait until it closes. Install a pressure gauge between the two closed valves using one of the two ports in the outlet side of the Hytrol. Watch the pressure gauge. If the pressure begins to climb, then either the downstream isolation valve is permitting pressure to creep back, or the Hytrol is allowing pressure to go through it. Usually the pressure at the Hytrol inlet will be higher than on the isolation valve discharge, so if the pressure goes up to the inlet pressure, you can be sure the Hytrol is leaking. Install another gauge downstream of isolating valve. If the pressure between the valves only goes up to the pressure on the isolation valve discharge, the Hytrol Valve is holding tight, and it was just the isolation valve leaking.

Maintenance

Preventative Maintenance

The Cla-Val Co. Model 100-01 Hytrol Valve requires no lubrication or packing and a minimum of maintenance. However, a periodic inspection schedule should be established to determine how the operating conditions of the system are affecting the valve. The effect of these actions must be determined by inspection.

Disassembly

Inspection or maintenance can be accomplished without removing the valve from the line. Repair kits with new diaphragm and disc are recommended to be on hand before work begins.

WARNING: Maintenance personnel can be injured and equipment damaged if disassembly is attempted with pressure in the valve. **SEE CAUTION.**

1. Close upstream and downstream isolation valves **and independent operating pressure when used** to shut off all pressure to the valve.

2. Loosen tube fittings in the pilot system to remove pressure from valve body and cover chamber. After pressure has been released from the valve, use care to remove the controls and tubing. Note and sketch position of tubing and controls for re-assembly. The schematic in front of the Technical Manual can be used as a guide when reassembling pilot system.

3. Remove cover nuts and remove cover. If the valve has been in service for any length of time, chances are the cover will have to be loosened by driving upward along the edge of the cover with a **dull** cold chisel.

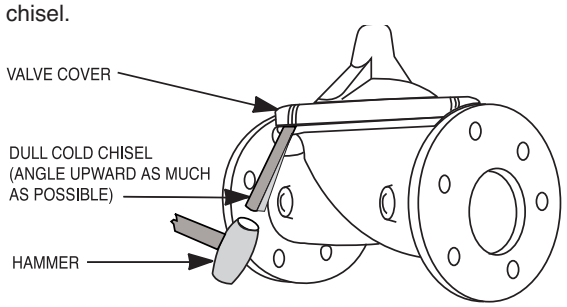

On 6” and smaller valves block and tackle or a power hoist can be used to lift valve cover by inserting proper size eye bolt in place of the center cover plug. on 8” and larger valves there are 4 holes (5/8” — 11 size) where jacking screws and/or eye bolts may be inserted for lifting purposes. **Pull cover straight up** to keep from damaging the integral seat bearing and stem.

COVER CENTER PLUG SIZE

Valve Size	Thread Size (NPT)
1 1/4"—1 1/2"	1/4"
2"—3"	1/2"
4"—6"	3/4"
8"—10"	1"
12"	1 1/4"
14"	1 1/2"
16"	2"
20” & 24"	2"
30” & 36”	2”

4. Remove the diaphragm and disc assembly from the valve body. With smaller valves this can be accomplished by hand by **pulling straight up on the stem so as not to damage the seat bearing.** On large valves, an eye bolt of proper size can be installed in the stem and the diaphragm assembly can be then lifted with a block and tackle or power hoist. Take care not to damage the stem or bearings. The valve won't work if these are damaged.

VALVE STEM THREAD SIZE

Valve Size	Thread Size (UNF Internal)
1 1/4"—2 1/2"	10—32
3"—4"	1/4—28
6"—14"	3/8—24
16"	1/2—20
20	3/4-16
24"	3/4-16
30”	3/4-16
36”	3/4-16

5. The next item to remove is the stem nut. Examine the stem threads above the nut for signs of mineral deposits or corrosion. If the threads are not clean, use a wire brush to remove as much of the residue as possible. Attach a good fitting wrench to the nut and give it a sharp “rap” rather than a steady pull. Usually several blows are sufficient to loosen the nut for further removal. On the smaller valves, the entire diaphragm assembly can be held by the stem in a vise **equipped with soft brass jaws** before removing the stem nut.

The use of a pipe wrench or a vise without soft brass jaws scars the fine finish on the stem. No amount of careful dressing can restore the stem to its original condition. Damage to the finish of the stem can cause the stem to bind in the bearings and the valve will not open or close.

6. After the stem nut has been removed, the diaphragm assembly breaks down into its component parts. Removal of the disc from the disc retainer can be a problem if the valve has been in service for a long time. Using two screwdrivers inserted along the outside edge of the disc usually will accomplish its removal. Care should be taken to preserve the spacer washers in water, particularly if no new ones are available for re-assembly.

7. The only part left in the valve body is the seat which ordinarily does not require removal. Careful cleaning and polishing of inside and outside surfaces with 400 wet/dry sandpaper will usually restore the seat’s sharp edge. If, however, it is badly worn and replacement is necessary, it can be easily removed.

Seats in valve sizes 1 1/4” through 6” are threaded into the valve body. They can be removed with accessory X109 Seat Removing Tool available from the factory. On 8” and larger valves, the seat is held in place by flat head machine screws. Use a tight-fitting, long shank screwdriver to prevent damage to seat screws. If upon removal of the screws the seat cannot be lifted out, it will be necessary to use a piece of angle or channel iron with a hole drilled in the center. Place it across the body so a long stud can be inserted through the center hole in the seat and the hole in the angle iron. By tightening the nut a uniform upward force is exerted on the seat for removal.

NOTE: Do not lift up on the end of the angle iron as this may force the integral bearing out of alignment, causing the stem to bind.

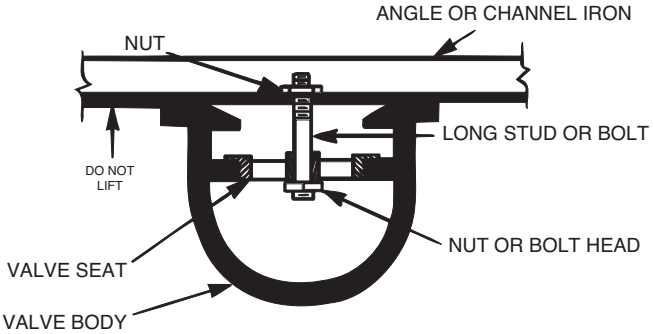

Lime Deposits

One of the easiest ways to remove lime deposits from the valve stem or other metal parts is to dip them in a 5-percent muriatic acid solution just long enough for the deposit to dissolve. This will remove most of the common types of deposits. **CAUTION: USE EXTREME CARE WHEN HANDLING ACID.** Rinse parts in water before handling. If the deposit is not removed by acid, then a fine grit (400) wet or dry sandpaper can be used with water.

Inspection of Parts

After the valve has been disassembled, each part should be examined carefully for signs of wear, corrosion, or any other abnormal condition. Usually, it is a good idea to replace the rubber parts (diaphragm and disc) unless they are free of signs of wear. These are available in a repair kit. Any other parts which appear doubtful should be replaced. WHEN ORDERING PARTS, BE SURE TO GIVE COMPLETE NAMEPLATE DATA, ITEM NUMBER AND DESCRIPTION.

NOTE: If a new disc isn't available, the existing disc can be turned over, exposing the unused surface for contact with the seat. The disc should be replaced as soon as practical.

Reassembly

1. Reassembly is the reverse of the disassembly procedure. If a new disc has been installed, it may require a different number of spacer washers to obtain the right amount of "grip" on the disc. When the diaphragm assembly has been tightened to a point where the diaphragm cannot be twisted, the disc should be compressed very slightly by the disc guide. Excessive compression should be avoided. Use just enough spacer washers to hold the disc firmly without noticeable compression.

2. MAKE SURE THE STEM NUT IS VERY TIGHT. Attach a good fitting wrench to the nut and give it a sharp "rap" rather than a steady pull. Usually several blows are sufficient to tighten the stem nut for final tightening. Failure to do so could allow the diaphragm to pull loose and tear when subjected to pressure.

3. Carefully install the diaphragm assembly by lowering the stem through the seat bearing. Take care not to damage the stem or bearing. Line up the diaphragm holes with the stud or bolt holes on the body. on larger valves with studs, it may be necessary to hold the diaphragm assembly up part way while putting the diaphragm over the studs.

4. Put spring in place and replace cover. Make sure diaphragm is lying smooth under the cover.

5. Tighten cover nuts firmly using a cross-over pattern until all nuts are tight.

6. Test Hytrol Valve before re-installing pilot valve system.

Test Procedure After Valve Assembly

There are a few simple tests which can be made in the field to make sure the Hytrol Valve has been assembled properly. Do these before installing pilot system and returning valve to service. These are similar to the three troubleshooting tests.

1. Check the diaphragm assembly for freedom of movement after all pressure is removed from the valve. **SEE CAUTION.** Insert fabricated tool into threaded hole in top of valve stem, and lift the diaphragm assembly manually. Note any roughness, sticking or grabbing. The diaphragm assembly should move smoothly throughout entire valve stroke. The tool is fabricated from rod that is threaded on one end to fit valve stem (See chart in Step 4 of "Disassembly" section.) and has a "T" Bar handle of some kind on the other end for easy gripping.

Place marks on this diaphragm assembly lifting tool when the valve is closed and when manually positioned open. The distance between the two marks should be approximately the stem travel shown in stem travel chart. (See "Freedom of Movement Check" section.) If the stroke is different than that shown, there is a good reason to believe something is mechanically restricting the stroke of the valve. The cover must be removed, the obstruction located and removed. (See "Maintenance" Section for procedure.)

Due to the weight of the diaphragm assembly this procedure is not possible on valves 8" and larger. on these valves, the same determination can be made by carefully introducing a low pressure-less than five psi) into the valve body with the cover vented. **SEE CAUTION**. Looking in cover center hole see the diaphragm assembly lift easily without hesitation, and then settle back easily when the pressure is removed.

2. To check the valve for drip-tight closure, a line should be connected from the inlet to the cover, and pressure applied at the inlet of the valve. If properly assembled, the valve should hold tight with as low as ten PSI at the inlet. See "Tight Sealing Check" section.)

3. With the line connected from the inlet to the cover, apply full working pressure to the inlet. Check all around the cover for any leaks. Re-tighten cover nuts if necessary to stop leaks past the diaphragm.

4. Remove pressure, then re-install the pilot system and tubing exactly as it was prior to removal. **Bleed air from all high points.**

5. Follow steps under "Start-Up and Adjustment" Section in Technical Manual for returning complete valve back to service.

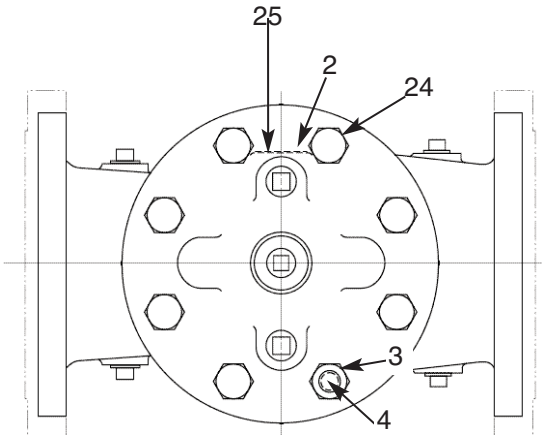

TOP VIEW

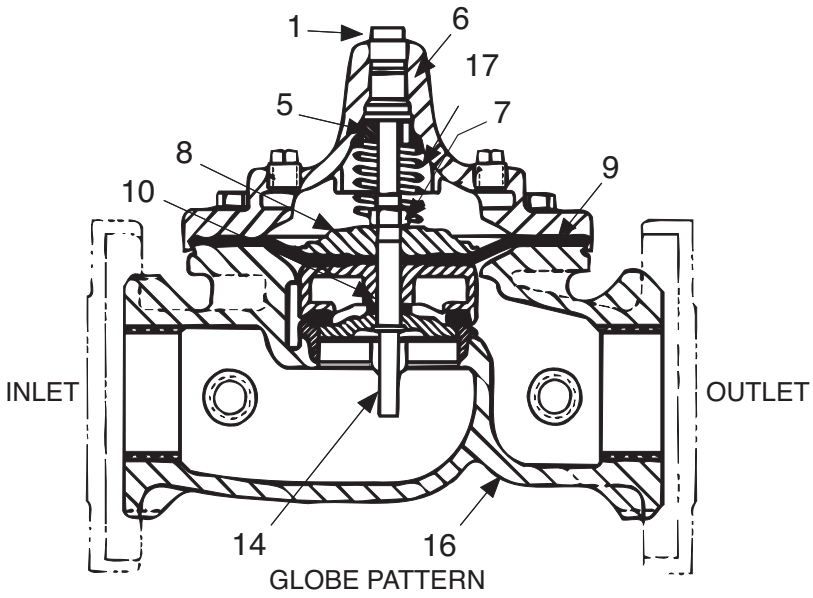

GLOBE PATTERN

PARTS LIST

Item	Description
1.	Pipe Plug
2.	Drive Screws (for nameplate)
3.	Hex Nut (8” and larger)
4.	Stud (8” and larger)
5.	Cover Bearing
6.	Cover
7.	Stem Nut
8.	Diaphragm Washer
9.	Diaphragm
10.	Spacer Washers
11.	Disc Guide
12.	Disc Retainer
13.	Disc
14.	Stem
15.	Seat
16.	Body
17.	Spring
22.	Flat Head Screws (8” and larger)
23.	Seat O-Ring
24.	Hex head Bolt (1 1/4” thru 4”)
25.	Nameplate
26.	Upper Spring Washer (Epoxy coated valves only)
27.	Lower Spring Washer (Epoxy coated valves only)
28.	Cover Bearing Housing (16” only)
29.	Cover O-Ring (16’” only)
30.	Hex Bolt (16” only)
31.	Pipe Cap (16” only)

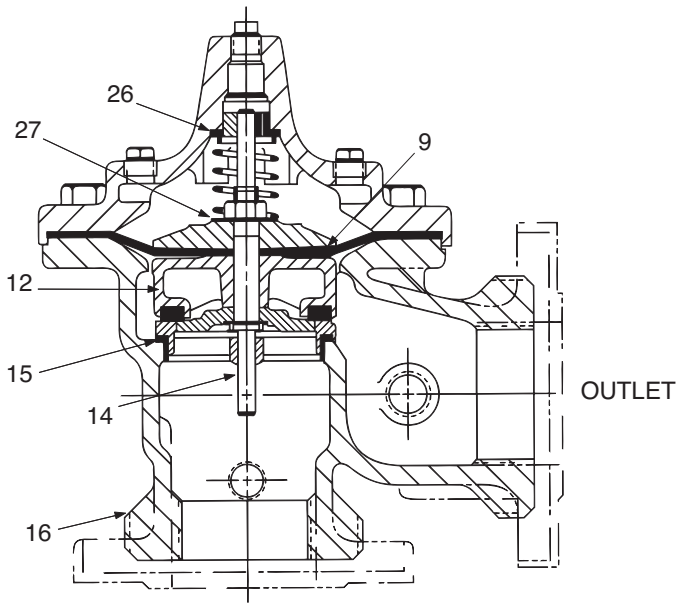

INLET
ANGLE PATTERN

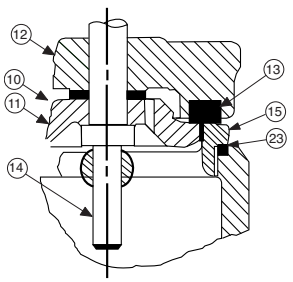

1 1/4" - 6" SEAT DETAIL

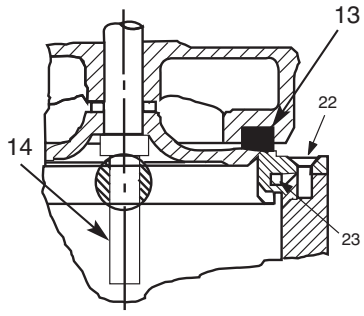

8" - 24" SEAT DETAIL

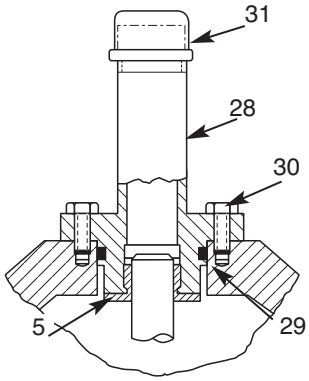

16" COVER DETAIL

CLA-VAL®

—MODEL— 100-01
Hytrol Valve Service Data

Description 100-01 Hytrol Valve

The Cla-Val Model 100-01 Hytrol Valve is a main valve for Cla-Val Automatic Control Valves. It is a hydraulically operated, diaphragm-actuated, globe or angle pattern valve.

This valve consists of three major components; body, diaphragm assembly, and cover. The diaphragm assembly is the only moving part. The diaphragm assembly uses a diaphragm of nylon fabric bonded with synthetic rubber. A synthetic rubber disc, contained on three and one half sides by a disc retainer and disc guide, forms a seal with the valve seat when pressure is applied above the diaphragm. The diaphragm assembly forms a sealed chamber in the upper portion of the valve, separating operating pressure from line pressure.

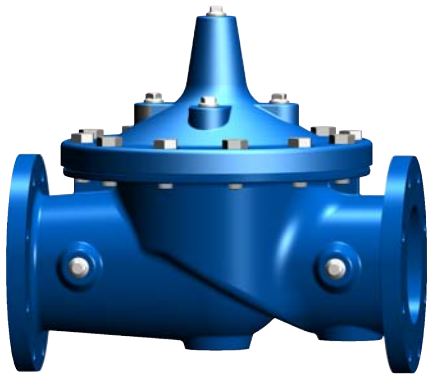

Description 100-20 600 Series Hytrol Valve

The Cla-Val Model 100-20 Hytrol Valve (600 Series main valve) have only one part -the body- that is different from standard 100 Series Cla-Val main valve parts. The remaining parts of the 600 series main valve are standard Cla-Val main valve parts. All service and maintenance information for the standard 100 Series main valves also apply to the 600 series main valves.
The most important thing to remember when ordering main valve repair kits and replacement parts, except for the body, all other parts are going to be for a smaller size main valve. Cla-Val identifies main valve parts with the flange size of the standard 100 Series main valve. Refer to the "Main Valve Sizes" chart below.

HYTROL Service Data

HYTROL SIZE				Stem Travel		Cover Capacity Displacement		Valve Stem Thread UNF-Internal	Cover Center Plug NPT	Cover Nut or Bolt			Cover Lifting Holes UNC	Cover Plug		Cover Torque		Stem Nut**		Stem Nut Torque (ft. Lbs.)	
100-01		100-20								Thread (Bolt)	Socket	Qty		Thread	Socket	ft. Lbs.	in. Lbs.	Thread	Socket (Long)		
inches	mm	inches	mm	inches	mm	Gallons	Liters													Lubed	DRY
1"	25			0.3	8				1/4"	1/4" - 20 (B)	7/16"	8				4	48	3/8" - 24		4	6
1 1/4"	32			0.4	10	0.020	0.07	10 - 32	1/4"	5/16" - 18 (B)	1/2"	8				8	96	7/16" -20		6	10
1 1/2"	40			0.4	10	0.020	0.07	10 - 32	1/4"	5/16" - 18 (B)	1/2"	8				8	96	7/16" -20		6	10
2"	50			0.6	15	0.032	0.12	10 - 32	1/2"	3/8" - 16 (B)	9/16"	8		3/8"	7/16"	12		1/2" - 20	3/4"	10	15
2 1/2"	65			0.7	18	0.043	0.16	10 - 32	1/2"	7/16" - 14 (B)	5/8"	8		1/2"	9/16"	20		5/8" - 18	15/16"	21	30
3"	80	4"	100	0.8	20	0.080	0.30	1/4 - 28	1/2"	1/2" - 13 (B)	3/4"	8		1/2"	9/16"	30		5/8" - 18	15/16"	21	30
4"	100	6"	150	1.1	23	0.169	0.64	1/4 - 28	3/4"	3/4" - 10 (B)	1 1/8"	8		3/4"	5/8"	110		3/4" - 16	1 1/16"	40	60
6"	150	8"	200	1.7	43	0.531	2.00	3/8 - 24	3/4"	3/4" - 10 (B)	1 1/8"	12		3/4"	5/8"	110		7/8" - 14	1 5/16"	85	125
8"	200	10"	250	2.3	58	1.26	4.80	3/8 - 24	1"	3/4" - 10	1 1/4"	16	5/8" - 11	1"	13/16"	110		1 1/8" -12	1 13/16"	125	185
10"	250	12"	300	2.8	71	2.51	9.50	3/8 - 24	1"	7/8" - 9	1 7/16"	20	3/4" - 10	1"	13/16"	160		1 1/2" -12	1 7/8"	252	375
12"	300	16"	400	3.4	86	4.0	15.10	3/8 - 24	1 1/4"	1 1/8" - 7	1 13/16"	20	3/4" - 10	1"	13/16"	390		1 1/2" -12	2 1/2"	270	400
14"	350			3.9	99	6.5	24.60	3/8 - 24	1 1/2"	1 1/4" - 7	2"	20	1" - 8	1"	13/16"	545		1 1/2" -12	2 1/2"	280	420
16"	400	20", 24"	600	4.5	114	9.6	36.20	1/2 - 20	2"	1 1/4" - 7	2"	20	1" - 8	1"	13/16"	545		2" - 16	3"	500	750
20"	500			5.63	143	12	45.40	3/4 - 16	1 1/2"	1 3/8" - 6	2 1/8"	24	1" - 8	1"	13/16"	670		2 1/4" - 16	3 1/2"	930	N/R
24"	600	30"	800	6.75	165	29.0	108.80	3/4 - 16*	3/4"	1 1/2" - 12	2 3/8"	24	1 1/8"- 7	1"	13/16"	800		3" - 12	Special	1350	N/R

* Adapter p/n 2594101E inside 1/4" - 28"

Grade 5 Bolts
"Heavy" Grade Nuts
Tighten cover nuts in a "star" cross-over pattern

** Must Use ONLY Cla-Val Supplied part

BOLT/NUT TORQUING PROCEDURES ON VALVE COVERS

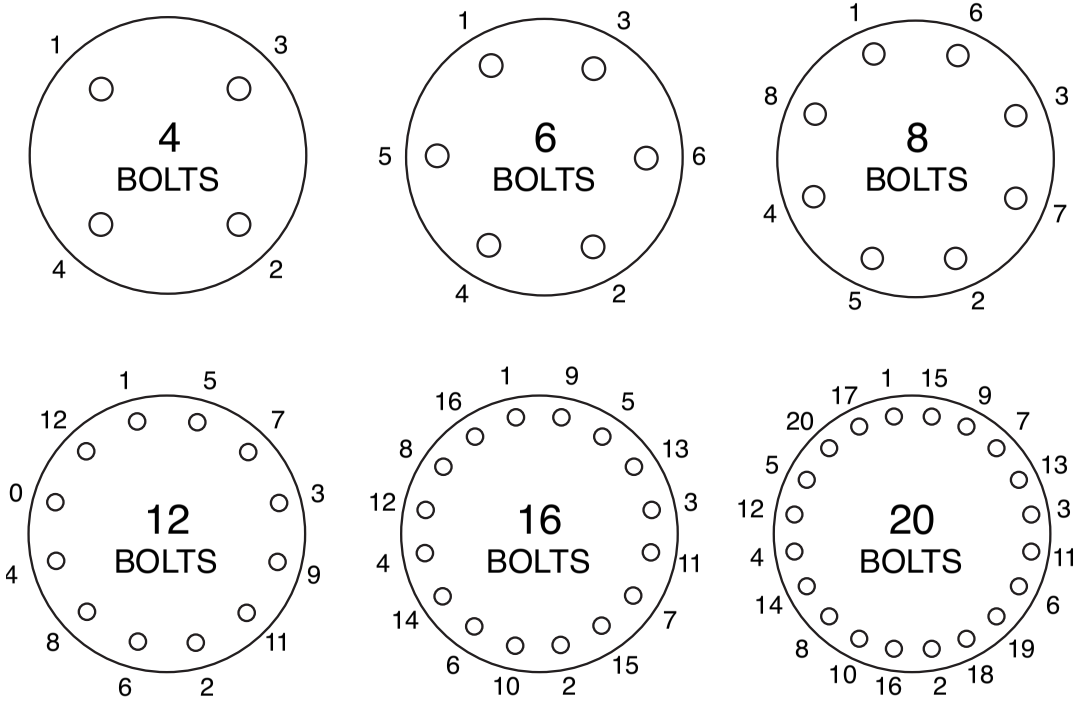

Follow this procedure when reassembling MAIN Valve:

1. Tightens bolts/nuts in a “Star” or “Cross-Over” pattern following the numbers shown above to insure that cover seats evenly on the diaphragm material and body.

2. Torque the bolt/nuts in three stages with a "Star" or "Cross-Over" pattern for each stage:

   A. To approximately 10% of final torque.
   B. To approximately 75% of final torque.
   C. To final required torque.

3. Valves that are to be tested to 375 PSI or higher should be retorqued after 24 hours.

100-01 Hytrol Main Valve Assembly

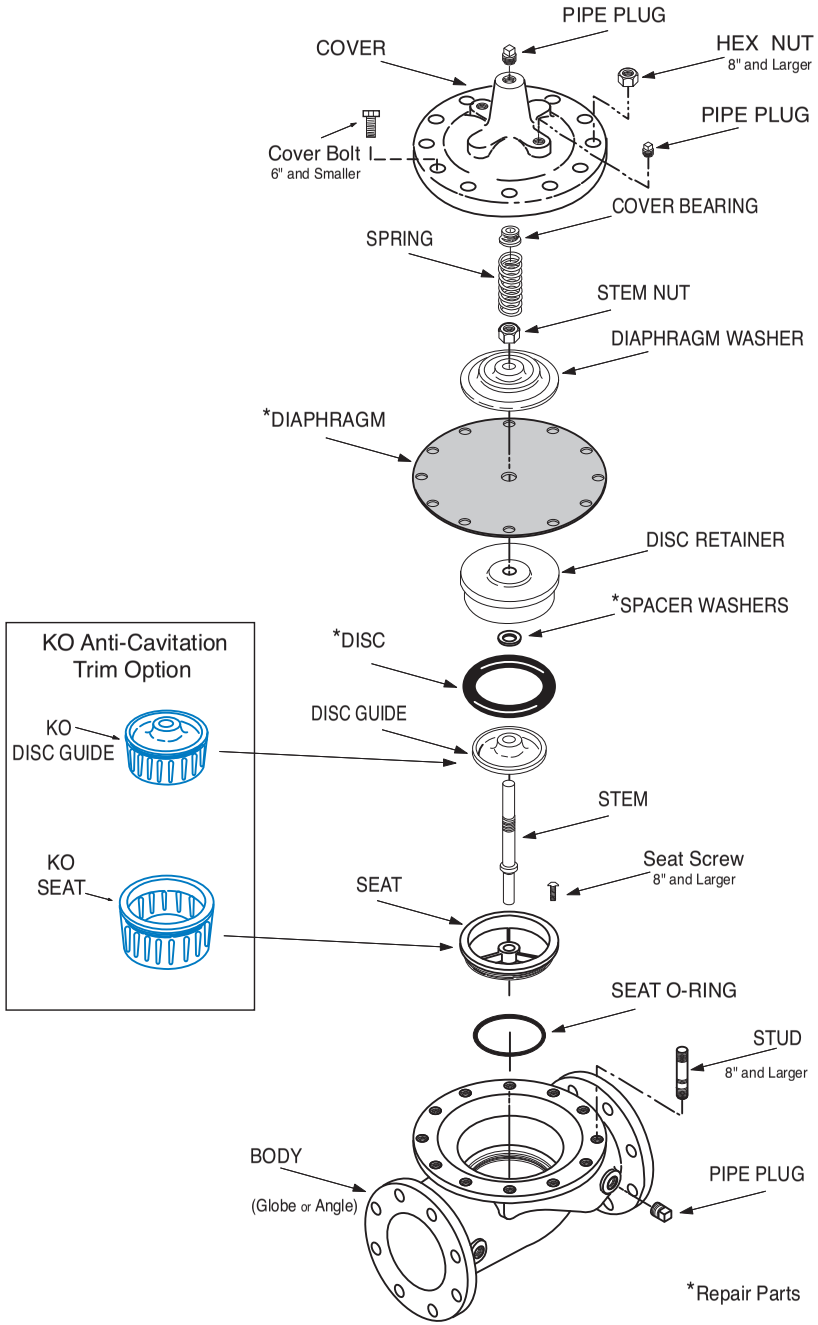

CLA-VAL P.O. Box 1325 • Newport Beach, CA 92659-0325 • Phone: 949-722-4800 • Fax: 949-548-5441 • E-mail: claval@cla-val.com • Website cla-val.com
© Copyright Cla-Val 2014 Printed in USA Specifications subject to change without notice.

SINCE 1908
wessels company

SUBMITTAL

FXA-SERIES

HYDRO-PNEUMATIC TANKS

Models: FXA-35 thru FXA-800L
Submittal Sheet No. C-1004B Date: 6/13

Description

Wessels type FXA tanks are ASME replaceable bladder type pre-charged hydro-pneumatic tanks for commercial and industrial well and water systems, booster systems, or other potable water applications. They are designed to deliver water under pressure between pump cycles to provide sufficient flow to meet demands. The water is contained in a butyl bladder. All FXA hydro-pneumatic tanks can be installed vertically or horizontally.

Construction

Shell: Carbon Steel
Bladder: Heavy Duty Butyl (FDA Approved)
System Connection: Epoxy lined

Performance Limitations Maximum
Design Temperature: 240°F Maximum
Design Pressure: 125 PSIG*

*200 & 250 PSIG available

NSF Listed Materials

Model Number	Part Number	Tank Volume (Gallons)
FXA-35	21010035	10
FXA-50	21010050	13
FXA-85	21010085	23
FXA-130	21010130	35
FXA-200	21010200	53
FXA-300	21010300	79
FXA-400	21010400	106
FXA-500	21010500	132
FXA-600	21010600	158
FXA-800L	21010805	211

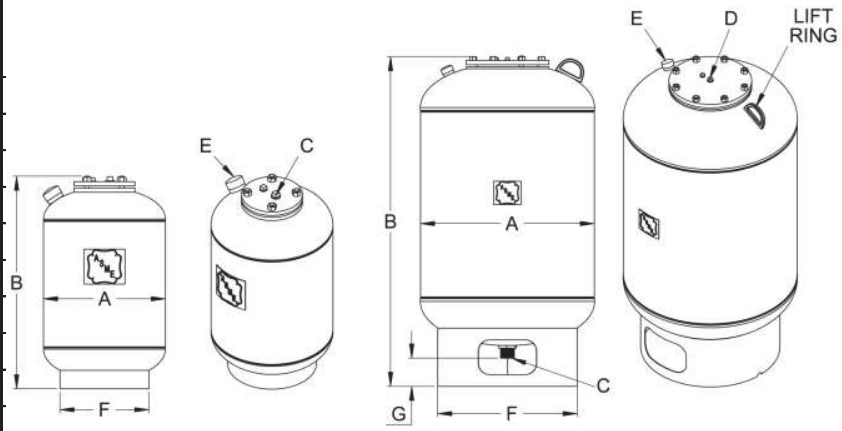

Dimensions & Weights

Model Number	Dimensions in Inches							Approx. Ship Wt. (lbs)
	A	B	System Connection		Charging Valve	F	G	
			C	D	E			
FXA-35-WG	12	23 1/2	3/4	-	0.302 - 32NC	10	-	40
FXA-50-WG	14	24						50
FXA-85-WG	16	37	1	1/2		12	2	90
FXA-130-WG	20					16		125
FXA-200-WG	24	43	1 1/2			20		210
FXA-300-WG		55		3/4				225
FXA-400-WG	30	49				24		300
FXA-500-WG		57	2					330
FXA-600-WG		65						360
FXA-800L-WG	32	76				28		475

AS-I/O

SINCE 1908 wessels company

Wessels Hydropneumatic Storage & Maintenance

Product Storage and Handling Requirements

WARNING: Carefully read the Storage and Handling Requirements to avoid serious Personal injury and/or damage to property and to ensure safe use and proper care of this product

Wessels ASME tanks rigidly constructed and are designed to be easily handled by the end user. Upon receiving product, a visual inspection should be performed, as damage may have occurred during transit.

Handling:

All tanks should be moved using the lift lugs welded to the unit (if equipped). Lifting the tank by clipping an eye hook into the lift lugs is the safest and most effective way to move the unit. Note that not all lift lugs are placed at the center of gravity, the unit may shift once lift off the ground. Ensure that the weight of the unit does not exceed the rating of the rigging equipment.

Note: Bladder tanks are shipped from the factory with an air precharge. Damaging these tanks can be extremely dangerous.

Outdoor Storage:

- Cover all units with a tarp to protect from the elements.
- Do not store in potential flood plain.
- Cover all openings on the units to prevent foreign matter from entering the unit.
- Place in a safe location, away from heavy traffic.
- Bladder tanks are under pressure during shipment. Damaging these tanks could be extremely dangerous.

Indoor Storage:

- Cover all openings on the units to prevent foreign matter from entering the unit.
- Unit should be stored in a dry environment, away from any potential sources of moisture.
- Place in a safe location, away from heavy traffic.
- Bladder tanks are under pressure during shipment. Damaging these tanks could be extremely dangerous.

Operation:

A bladder pressure tank contains pressurized air and water, separated by a flexible bladder. These tanks are typically pre-charged with air at the factory. As water pressure changes, the volume of air in a bladder tank contracts and expands. Periodically, the amount of air in the tank should be measured and the tank recharged if the air is too low.

A bladder tank's water storage capacity, or drawdown, for a typical commercial water system will typically be 30-40% of the tank's total volume. This volume performs several important functions:

- It maintains the desired range of water pressure in the distribution system.
- It minimizes pump cycling, preventing frequent starts and stops and protecting pumps from motor burnout or other water system components from damage.
- It protects against water hammer.

101 TANK ST ● GREENWOOD, IN 46143 ● (317) 888-9800 ● (317) 888-9988 FAX ● www.westank.com

Preventative Maintenance:

The bladder tank should be checked periodically (at least once per year) to ensure the pre-charge pressure is properly maintained. Changes in pre-charge pressure can significantly alter the tanks performance, and reduce the life expectancy of the bladder. If it appears that a bladder tank is not operating correctly, check the tank's air pre-charge:

1. Disconnect electrical power to the pump.
2. Drain the tank by opening the closest faucet.
3. Check the tank's pressure by placing an air pressure gauge on the air charging valve on the top of the tank.
4. Add air if the pressure is more than 2-3 psi below the pump cut-in pressure. Use caution when using an air compressor or air pump, and follow compressor manufacturer's safety warnings. As air is added, note the discharge from the open faucet:
    a. If water, continue adding pressure as needed to fully evacuate the water from the tank. Re-check the pre-charge pressure and adjust to 2-3 psi below pump cut-in pressure.
    b. If air, there is a tear or hole in the bladder. The bladder will need to be replaced.
5. Release air if the pressure is equal to or above the pump cut-in pressure (lowest pressure in the operating range). There should always be a small amount of water in the bladder when the pump turns on to avoid a pressure "flat spot". A "flat spot" is defined as a dramatic pressure drop that occurs while waiting for the pump to deliver water to the system piping.
6. Check for leaks in the air charging system by dripping a soap solution on the air charging valve.
7. Re-start the pump and run through a normal cycle to verify the setting. If tank pressure drops abnormally, the bladder inside the tank may have a tear or hole in it.

Is the tank waterlogged?

You should also check a bladder tank to determine if it's waterlogged. A tank is waterlogged if it is completely filled with water or has too much water to function correctly. Waterlogged bladder pressure tanks contribute to the following problems:

- The pump motor cycles too often. Frequent cycling can shorten the lifespan of a pump.
- Because waterlogged tanks can contain stagnant water, there can be unsatisfactory coliform samples or taste and odor complaints.
- Premature tank failure: The inside walls of a waterlogged tank can corrode and weaken from the exposure to water.

Reasons for waterlogging

Bladder tanks can become waterlogged for many reasons. Some of the more common reasons are:

- Sediment, such as iron and manganese, can coat the surface of the bladder, causing it to harden and become less flexible.
- Sediments can plug the fill or draw line, preventing the tank from filling and emptying normally.
- Excessive levels of chorine can damage the bladder, causing it to become brittle and less flexible.
- Tanks sitting directly on the ground or on another surface that is continually moist can rust and lose structural integrity.
- Chlorinators can give off corrosive vapors that cause the tank to rust.

101 TANK ST ● GREENWOOD, IN 46143 ● (317) 888-9800 ● (317) 888-9988 FAX ● www.westank.com

3.4 – Recommended Maintenance

First Week…

1. Inspect system for leaks. Tighten bolts if leaks are found.
2. Monitor system for any excessive vibration.
3. Record parameters: set points, settings, and alarm settings.
    a. Back up parameters onto a USB. *USB port is located on the back of the HMI.*
4. Record nameplate data. Take pictures, and save in secure location.

Daily…

1. Check for normal system operation by monitoring system pressure and normal sequencing.
2. Inspect system for leaks, noise, or vibration.
3. Check for leaks at or around the mechanical seal chamber.
4. Record and report any abnormal conditions as soon as possible and take corrective action as needed.

Weekly…

1. Inspect run time for all equal pumps. Run time should not be excessive on any single pump.
2. Manually alternate between all pumps and let each one run for 60 seconds.
3. Check Event Log for any alarms. Record type of alarm.
4. Check Trend Log for stability of suction pressure and system pressure. Record any abnormal jumps in either.
5. Feel piping and pumps for “warmth”.

Monthly…

1. Check and record incoming voltage for level and balance.
2. Inspect all pipe connections for leaks.
3. Exercise all isolation valves.
4. Inspect thermal relief valves that they are not stuck OPEN.
5. Record number of pumps are running during inspection. Record time of inspection.
6. Record suction pressure.
7. Make sure all HOA’s and variable speed drives are set to AUTO.

Semi-Annually…

1. Check motor bearing and lubricate if necessary. **Do not over grease** as this can cause premature bearing or winding failure.
2. If hydro-pneumatic tank is present, inspect for leaks, check pre-charge level of bladder.
3. If the pumps have a recirculation line, flush the tubing to make sure no debris is present.
4. Inspect mechanical space for leaks and humidity. Room should be clean, dry, and well ventilated.
5. If any rust is present on the skid, wire brush off and apply primer and paint.

Annually…

1. Inspect and tighten all electrical and hydraulic connections, including bolts.
2. Compare gauge reading to pressure reading on the HMI. Replace gauge if greater than 5 PSI difference.
3. Disassemble 81-12 and inspect rubber seating, replace if it looks damaged or worn.
4. Inspect all variable speed drive keypads for visibility and functionality by cycling HAND, OFF, and back to AUTO. Close each discharge valve prior so the plumbing system doesn't see a surge in pressure. **Do not leave pumps in hand.**
5. Record parameters: set points, settings, and alarm settings.
    a. Back up parameters onto a USB. *USB port is located on the back of the HMI.*

Recommended Spare Parts

The following parts list is a general list of what we recommend to keep on the shelf. This list may not be applicable for all systems. Several items do have a shelf life due to elastomers or other characteristics that if not used for several years may not be usable.

1. One Thermal Relief Valve.
2. One Set of Fuses.
3. One Can of Spray Paint.
4. One Mechanical Seal.
5. One Pressure Transducer.
6. One Check Valve Repair Kit.
7. VFD Keypad.

VC Systems stocks all standard parts at our factory in Tampa, Florida. If you need emergency parts or assistance, please contact your local representative. If you do not know who your representative is, please contact VC Systems at 1-800-881-3123 and be sure to have the System Serial Number ready. (*VCXX-XXXX, located on the face of the control panel.)*

Systems & Controls, Inc.

8811 Venture Cove
Tampa, FL 33617
1-800-881-3123

Property Name:
Address:
City: **State:**

Contact name:
Phone #:

GENERAL:	
Pump Room Condition?	
Booster System Condition?	
Room well Light?	
Room free of clutter?	

SYSTEM OVERVIEW:	
Number of pumps running?	
City Pressure?	
System Pressure?	
Visible leaks?	
Pipes hot?	
Is there a By-pass?	

Tank			
Pre-charge		Iso. Valve	
Size		Location	
Condition			

System Call Pressure	
System Pressure Set Point	
Lead Pump Minimum run timer	
Lag pump call timer	
Lag Pump Minimum Run Timer	
Lag/lag Pump call timer	
Lag/Lag Minimum Run timer	
Low Suction Set Point	
High System Set Point	
Operate valves	
Flush Control lines	
Verify Alternation	
Wipe System Down	
Return to Auto	

TECHNICIAN:

SYSTEM INFORMATION:			
Type of system			
Manufacturer			
Model #			
Serial #		Panel#	
Voltage		Location	
Pump #1			
Model		HP	
Amps		Vibration?	
Output PSI		VFD Speed	
Motor		RPM	
Pump #2			
Model		HP	
Amp		Vibration?	
output PSI		VFD Speed	
Motor		RPM	
Pump #3			
Model		HP	
Amp		Vibration?	
Output PSI		VFD Speed	
Motor		RPM	

NOTES:

SIGNATURE:
X

PRINT:

PROPERTY MANAGEMENT COMPANY:

DATE:

VC Systems & Controls, Inc.

WARRANTY – ECO Series - 2017

VC Systems' ECO Series are warranted for a period of twelve (12) months from manufacturing date. The warranty is limited to failure due to material defects or workmanship. For warranty to be in effect, the equipment must be installed, operated, serviced, and maintained with the manufacturers operation and maintenance manual and standard mechanical practice. The obligation of the manufacturer is limited to the repair or replacement of defective material or part.

VC System's is not responsible for normal labor charges, transportation, rigging, and handling. Damage resulting to normal wear parts or mechanical seals or damage from pumping product not covered. Further damages due to flooding, fire, wind, lightning, or acts of God are not covered. Damage that is result of maintenance neglect, misuse, or lack of normal service will not be covered. VC Systems disclaims any other warranty either implied or expressed and disclaims liability for property damage, loss of time, loss of income, loss of profit, or liability for liquidated or consequential damages. The maximum liability shall not exceed the cost of the authorized defective materials.

VC Systems extends no warranty, expressed or implied, beyond that outlined here, or those specifically agreed to, in writing, at the time of the order entry.

NOTES:

Motors
Motors covered under this warranty are required to be taken to a Baldor authorized motor shop for diagnosis for warranty claim. This includes catastrophic failures, vibration, or noise related to the motor.

Impellers (*VC ES Series Only*)
The impellers for VC ES Series pumps are warranted for 5 years against manufacturing defects, corrosion, or failure. This additional warranty is for parts only, same exclusions apply.

Exclusions:
This warranty does not cover mechanical seals, gauges, transportation, or labor costs for exchange, or installation of repaired or replaced materials. Final determination of warranty shall be made only by the factory upon return and inspection of returned material. No material is to be returned without a return material authorization (RMA) tag which may be obtained from contacting the factory.